Fuji Electric

Innovating Energy Technology

Fuji Integrated Controllers

Programmable Controllers

MICREX-SX Series

22B2-E-0004i

MICREX-SX series

SPH

Control, operation and supervisory integrated controllers

Realizes High-Speed Advanced Machine Control

I/O control with a program capacity of up to 512 K steps and up to 65,536 points enables a suitable system configuration ranging from small through to large scale. 0.25 ms program scan and I/O refresh are possible. Function and performance distribution are possible in a multi-CPU system configuration with up to 8 CPUs.

Open Network Oriented

Both the hardware and software conform to the IEC61131 international standard for programmable controllers. Compatible with Ethernet, EtherCAT, BACnet MS/TP*, DeviceNet, PROFIBUS-DP, and other diverse open networks.

*Only for Japan's doemestic market

Integration of Control, Information, and Communication

With the aid of an upgraded data processing function, mass memory storage, and a built-in Ethernet function, the SPH is capable of monitoring the operation of production systems and devices and recording operation history and errors in addition to conventional FA control. It thus enables you to use the controller for wider applications of IT-based remote monitoring, maintenance support, and preventive maintenance.
CPU and power supply redundancy can also be achieved in response to the growing demand for higher reliability.

Highly Reliable Duplex System Allows Stable Continuous Operation

SPH5000H

Redundant CPU, duplexed control network, and duplexed I/O network allow stable continuous operation. Control systems that require high reliability such as infrastructure equipment can be constructed.

Evolution from the SX bus to the E-SX bus

SPH5000M/H SPH3000MM/MG

The released E-SX bus has evolved from the SX bus, a system bus.
4096 words of the direct connection I/O capacity or 8 times the previous capacity, 2048 words/ms of the refresh performance or 16 times the previous performance, and 100 Mbps/100 m of the transmission speed and the station-to-station distance, 4 times the previous values, allow the bus to be applied to more complicated and large-scale device and facilities.

INDEX

Programmable Controller SPH

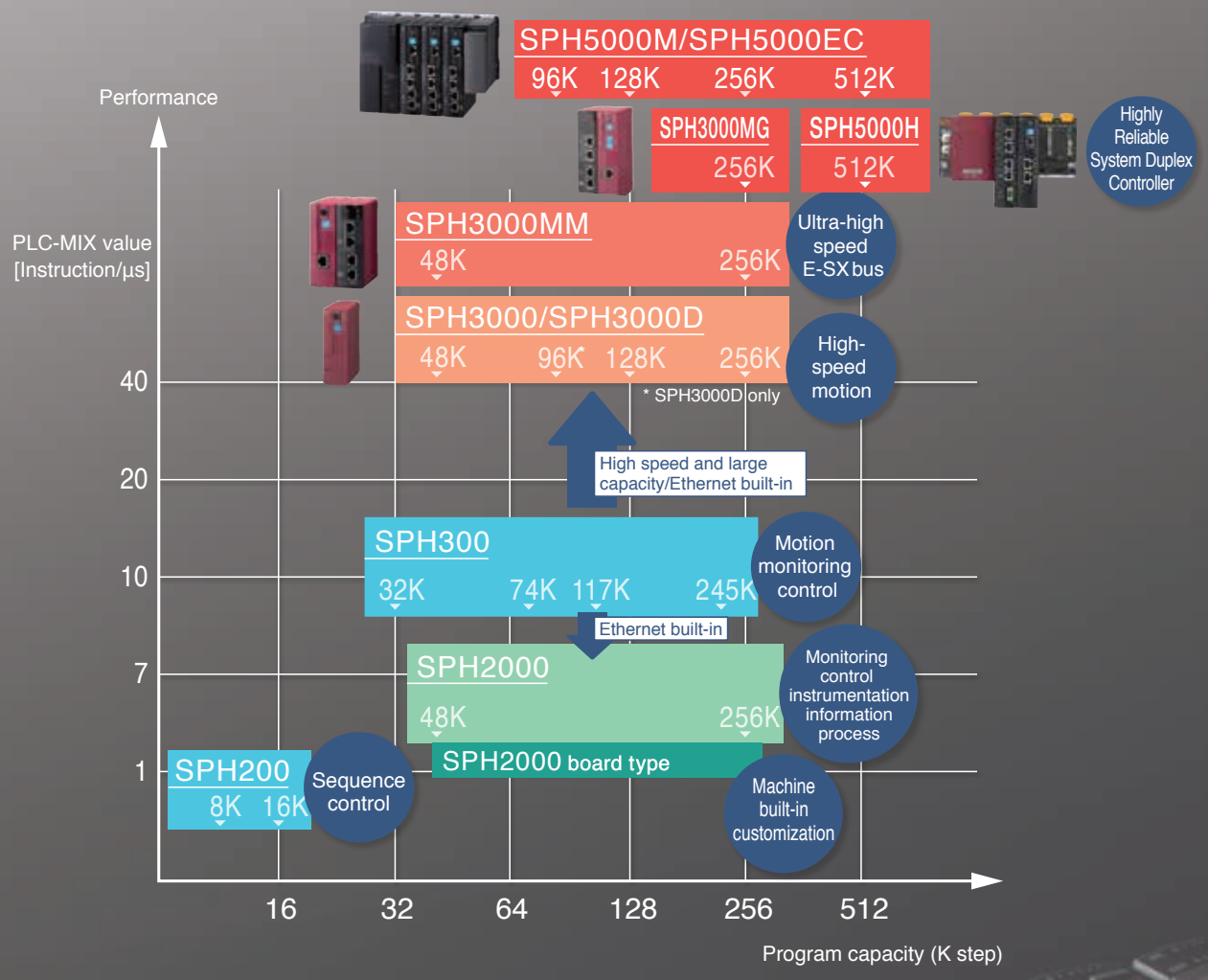

SX bus Diverse Network Systems Enabling Seamless Access

High-speed process and distributed arrangement of the E-SX bus and the SX bus allow seamless connections with human machine interfaces (HMIs), inverters, and servos. Various open network systems such from a small-scale application built in a machine to a hierarchical distributed system of large-scale line and facility devices can be constructed.

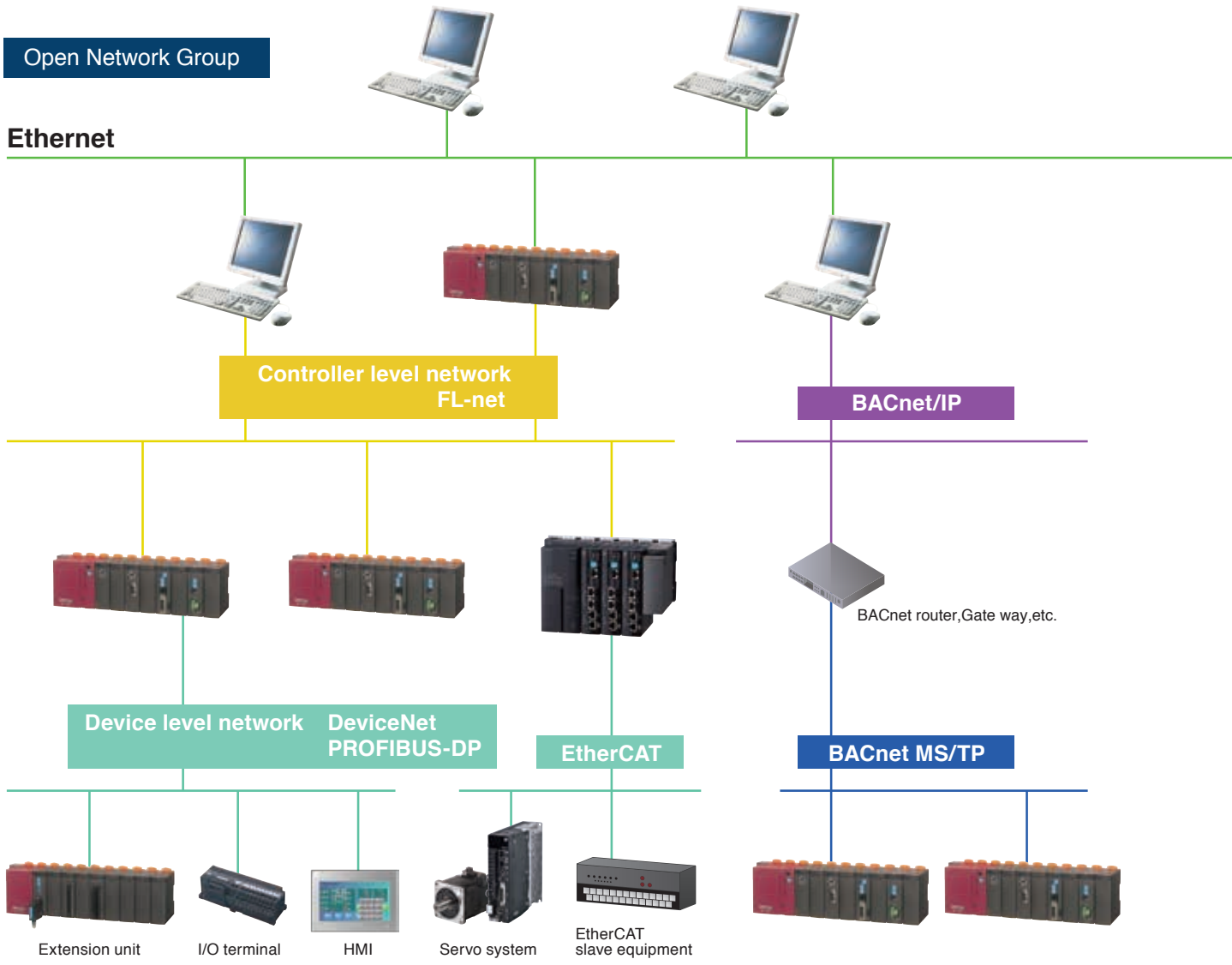

BACnet MS/TP*

BACnet is an open network that comprehensively monitors, controls, and manages the various facilities of building management systems, including their air conditioners, heaters, lighting, and emergency and security equipment. In particular, BACnet MS/TP is a BACnet communication protocol for field devices.

*Only for Japan's doemestic market

FL-net

Open network at the FA application type controller level established by the Japan Electrical Manufacturers Association. Allows inter-connection with PLC, CNC, and robots beyond the frame of a single manufacturer. The communication physical layer employs Ethernet.

PROFIBUS-DP

Device-level open network established by the EN50170 European standard. It best suits time-critical applications between an automation system and distributed devices (remote I/O, inverters, etc.).

Original Network Group

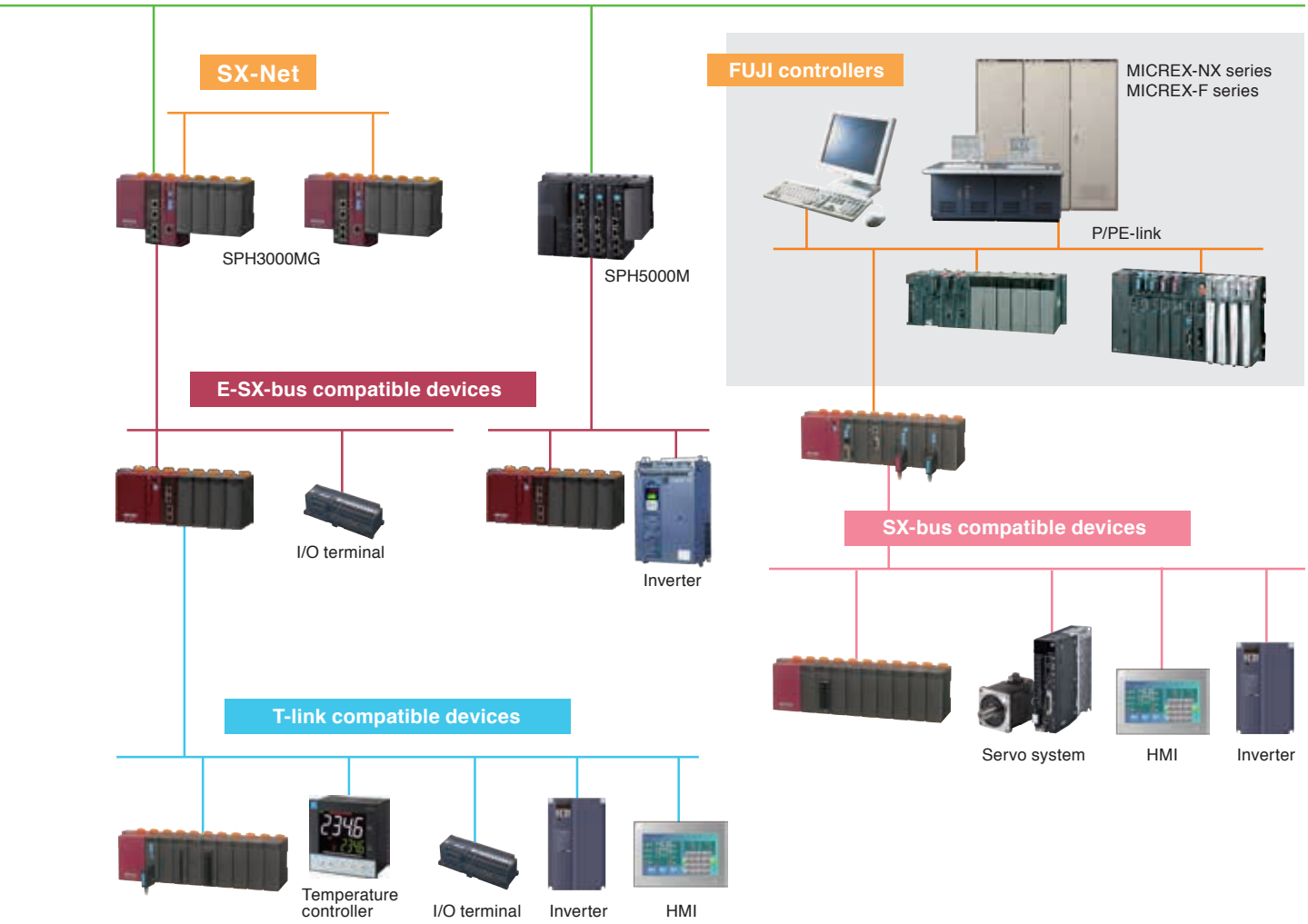

OPCN-1

Device-level open network established by Japan Electrical Manufacturers Association. Allows connection with PLC and robots using the same signal line beyond the frame of a single manufacturer, very effective in open system improvement and optimization.

DeviceNet

Open device-level network which facilitates inter-connection of control equipment such as PLCs, personal computers, sensors, and actuators. Wiring cost reduction by minimizing wiring, and multi-vendor equipment connection simplify an economical system configuration.

EtherCAT

An open network based on Ethernet, developed by Beckhoff Automation GmbH in Germany. Its ability to quickly transmit Ethernet frames with highly accurate time synchronization enables it to facilitate the construction of high-speed, high-precision control systems.

Realizes High-Speed Advanced Machine Control

Ultra-High-Speed 1 ms Controller

1 ms scan

- Program scan time of 1ms is implemented by increased instruction processing speed.
- Real number op eration and high-precision positioning control have been put to practical use by dramatically improved floating-point operation speed.

1 ms I/O refreshing

- 4096 points of I/O is refreshed in 1 ms
- Tact control assures a fixed I/O refresh interval. The I/O refresh cycle can be set to 1 ms, 2 ms, or up to 10 ms, which is suitable for processing requiring strict tact time.
- The minimum tact time of, SPH5000M, SPH300, and SPH2000/SPH3000 can be set at 0.25 ms, 0.5 ms, and 1 ms respectively.

	SPH5000M/EC	SPH5000H	SPH3000(D)	SPH300	SPH2000	SPH200
Basic instruction LD	4ns	6ns	9ns	20ns	30ns	70ns
MOV	4.4ns	5ns	8ns	40ns	40ns	140ns
Floating Operation instruction	25.3ns	66ns	88ns	80ns	270ns	56000ns

* For details on each instruction word's processing speed and tact cycle, see the User's Manual (FEH200).

●Operating timing

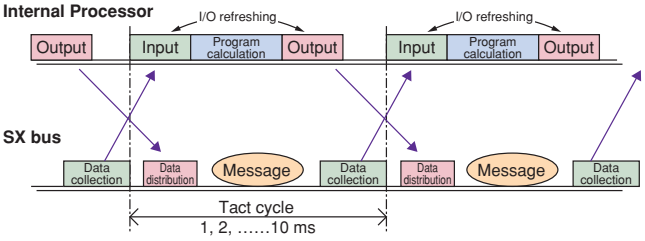

Tact Cycle

E-SX bus

Tact cycle		0.25ms	0.375ms	0.5ms	1ms	1.5ms	2ms
Max. I/O size (Number of I/O stations)	**4** stations	67word	256word	512word	2048word	2048word	4096word
	16 stations	—	—	256word	1024word	1024word	1024word
	32 stations	—	—	—	512word	2048word	2048word
	64 stations	—	—	—	—	512word	1024word

SX bus

Tact cycle	0.25ms	0.375ms	0.5ms	1ms	1.5ms	2ms
Max. I/O size	—	—	64word	128word	256word	512word

Controller Conforms to International Standard

Conforms to IEC 61131 international standard

- Both the hardware and software conform to the IEC 61131 international standard for programmable controllers.
- The programming language conforms to the IEC 61131-3 international standard.

Conforming to international standard

- Conforms to the CE marking, UL standards and RoHS directive (conforming one after another) as well as IEC standard.
- Also complies with maritime classification societies such as NK (Japan's Nippon Kaiji Kyokai) and LR (UK's Lloyd's Register).

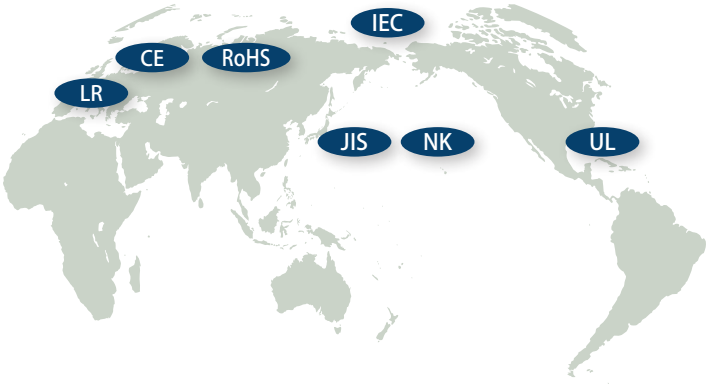

Multi-CPU System

Parallel processing
(SPH300/SPH2000/SPH3000/SPH3000D/SPH5000M/SPH5000EC)

- Alleviates the load for each CPU allowing high-speed processing of a large application program. For example, the load can be distributed for advanced processing and sequence control processing with additional CPUs. I/O refresh control is performed automatically even if parallel processing by multiple CPUs is performed.

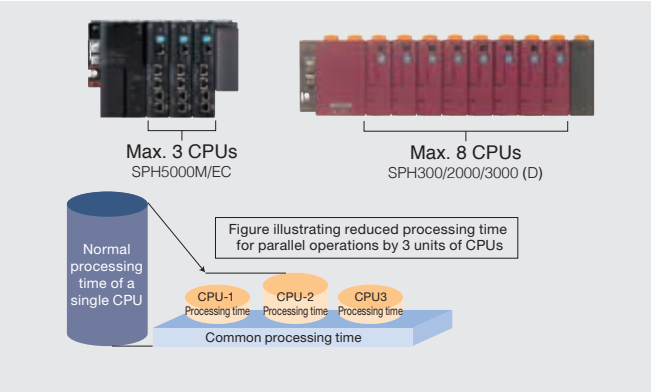

Redundant System Brings System Safety and Reliability

1:1 warm-standby feature (SPH300/SPH2000)

- This redundancy configuration enables continued operation without system downtime if a CPU fails. (Control may temporarily stop due to fault detection and CPU changeover.)
- The same program is stored in CPUs for the active and backup systems, allowing constant data value equalization.

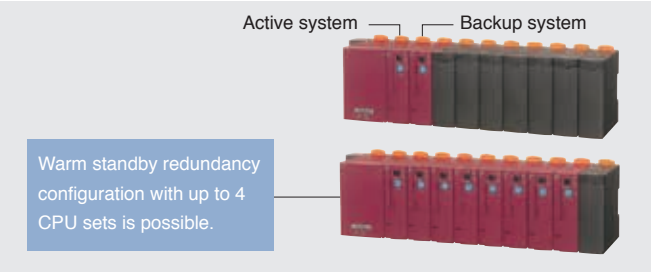

N:1 cold-standby feature (SPH300)

- N:1 backup feature enables reduction of the number of standby system CPUs to one, though when a CPU fails, data retained in the active system and that in the standby system are not equalized.
- Data retained by the active system is not taken over. The backup system CPU performs initial start.

- Programs can be intensively controlled by a memory card. Programs for N units of systems can be stored on a memory card, which is installed in the memory card interface module for centralized control of the programs. The same processing programs as on the down CPU are downloaded to the backup system CPU.

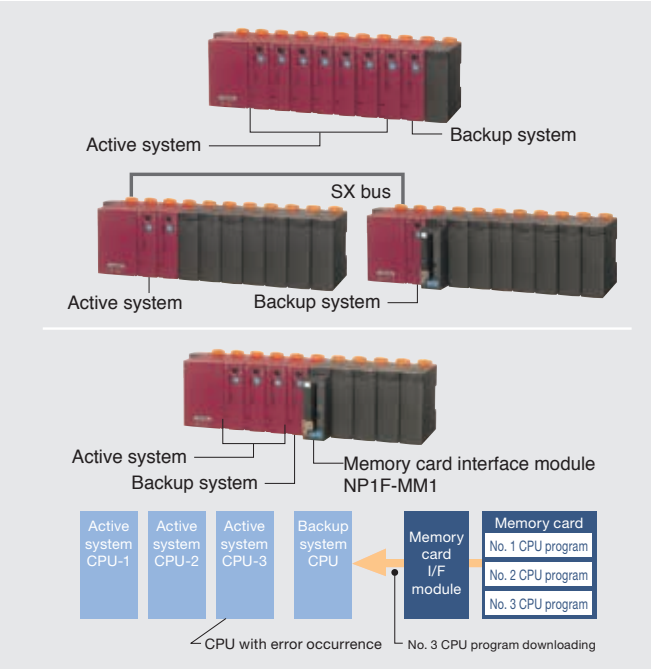

Highly reliable duplex system feature (SPH5000H)

- Allows you to construct control systems that support redundant CPU, duplexed control network, duplexed I/O network, and loop network.

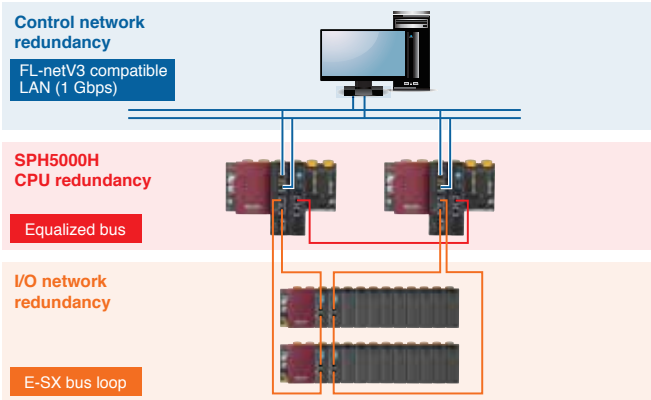

Note 1: The model that supports SPH2000 is NP1PM-256H.
Note 2: For a redundancy configuration buildup with a DC power supply, contact our sales section.

SX bus / E-SX bus Meets Diverse Demands for System Extension

Basic Configuration of SX bus

Ultra-high-speed SX bus preserves distributed installation and expandability up to 254-module direct bus connection.

Distributed placement is enabled by SX buses extended up to 25 m in total.

Up to 25 extension base boards, HMI and other SX-bus-based devices can be connected within 25 m. (Up to 25.6 km for optical transmission)

Free topology is implemented by T-branches.

Use of T branches allows detailed, distributed installation of the SX bus. Expansion units and diverse equipment arranged in a tree structure can be connected in the optimum way.

SX bus implements connecting max. 254 modules.

The number of modules that can be connected to the SX bus is a max. of 254 units. CPU modules, the communication modules, the positioning modules, the function modules, and the standard I/O modules can be connected up to 254 units.

Features of E-SX bus

Supports large-scale, high-speed control through its enhanced SX bus transmission speed and larger direct I/O capacity

Suitable for distributed large-scale machinery and equipment

Its total length of 1 km and station-to-station length of 100 m facilitates larger systems than the SX bus.

Compatible with large-scale, high-speed control systems

It increases direct I/O capacity to 4096 words and bus communication speed to 100 Mbps, four times faster than the SX bus. This enables faster control.

Contributes to the stable operation of control systems

It comes with loopback and signal bypass functions that make it possible to build systems resistant to equipment failure.

Comparison of Functions and Performances between the E-SX bus and the SX bus

Function and performance	SPH3000(D)	SPH5000M/H, 3000MM/MG	
System bus	SX bus	SX bus	E-SX bus
Direct connection I/O capacity	512 words	512 words	4096 words
Refresh performance	128 words/ms	128 words/ms	2048 words/ms
Transmission speed	25 Mbps	25 Mbps	100 Mbps
Tact fluctuation	100 µs	100 µs	± 1µs or less
Synchronization between stations	None	None	Provided (±1 µs or less)
Distance (between stations/total distance)	25 m/25 m	25 m/25 m	100 m/1 km
Continued operation with the line broken (Loopback)	None	None	Provided

Direct connection I/O capacity

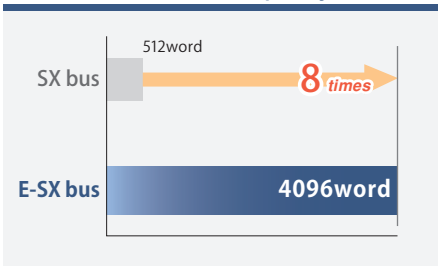

Transmission speed

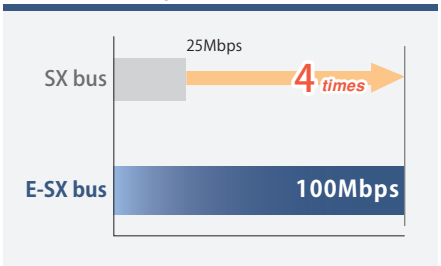

Refresh performance

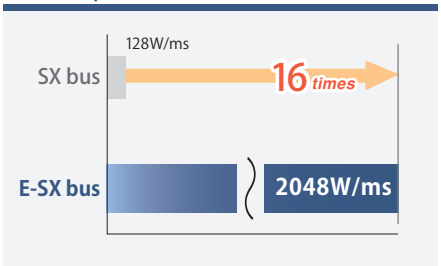

Tact accuracy

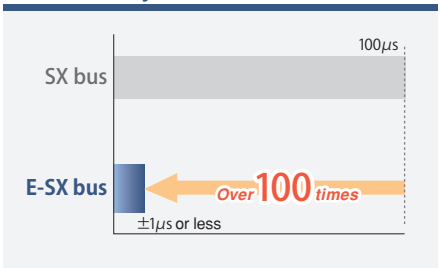

Distance

[Between stations]

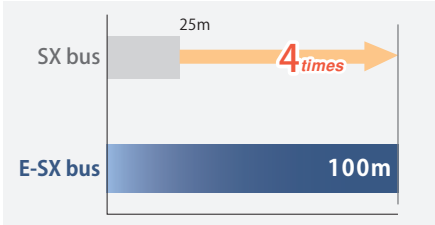

[Total distance]

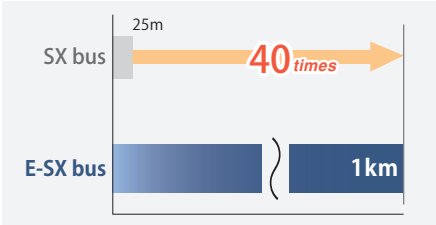

Synchronization Control of E-SX bus

Synchronization in the bus

Data output timing is synchronized in the E-SX bus.

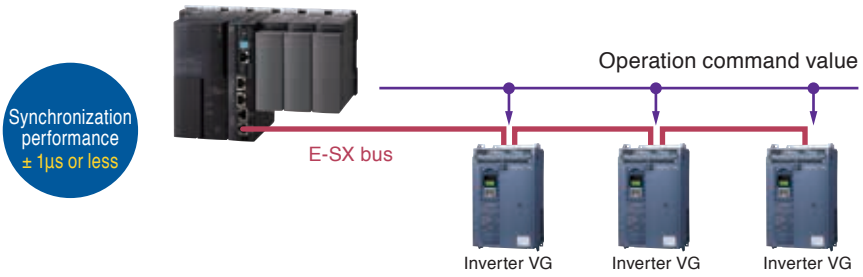

Synchronization between buses

Data output timing is synchronized between channels of the E-SX bus.

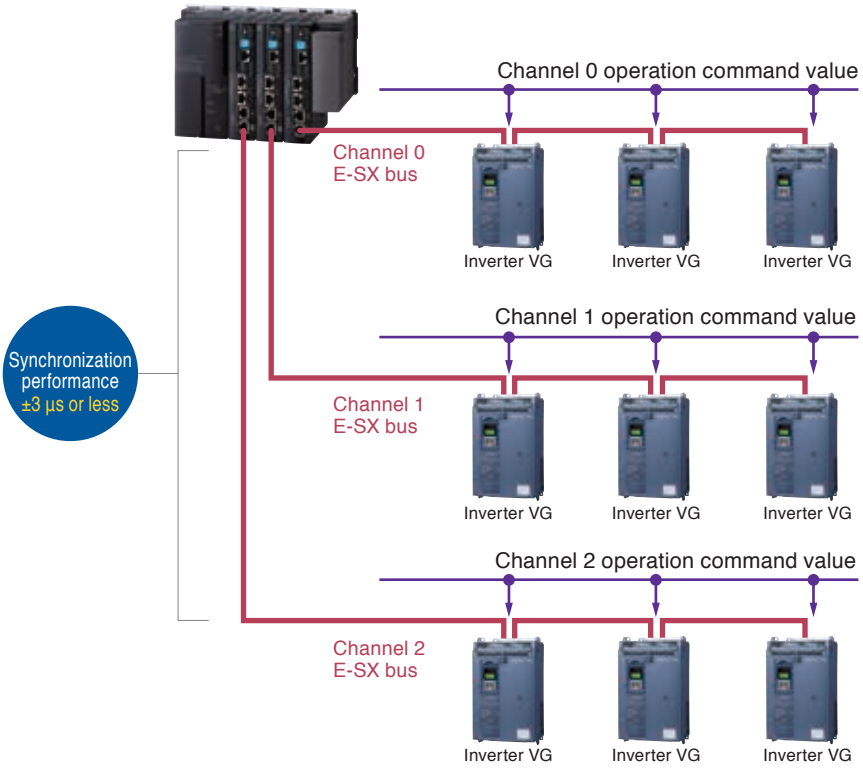

Connection Function of the E-SX bus

Loopback function

Communication is continued by the signal repeater function even when a wire is broken.

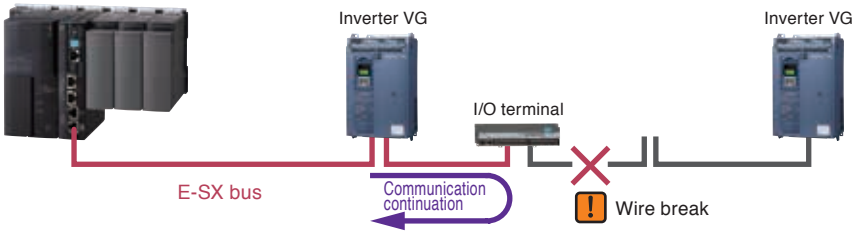

Signal bypass function

Even when a power of some devices is not turned on, the communication is continued by the auxiliary power unit.

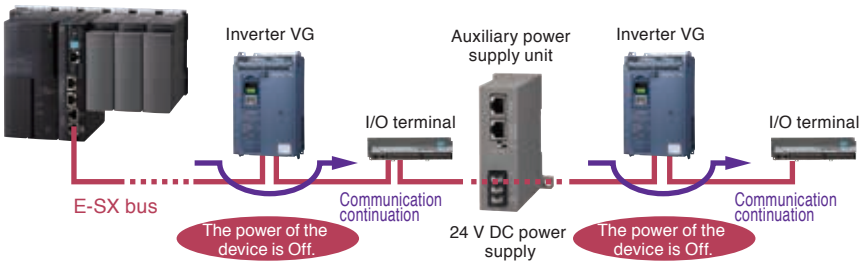

Improves Programming Development Efficiency

Two Types of Programming Support Tools in Accordance with Development Style

These are Windows-compatible programming support tools conforming to the IEC61131-3 International Standard.

SX-Programmer

Expert (D300win) Development Efficiency Oriented Support Tools

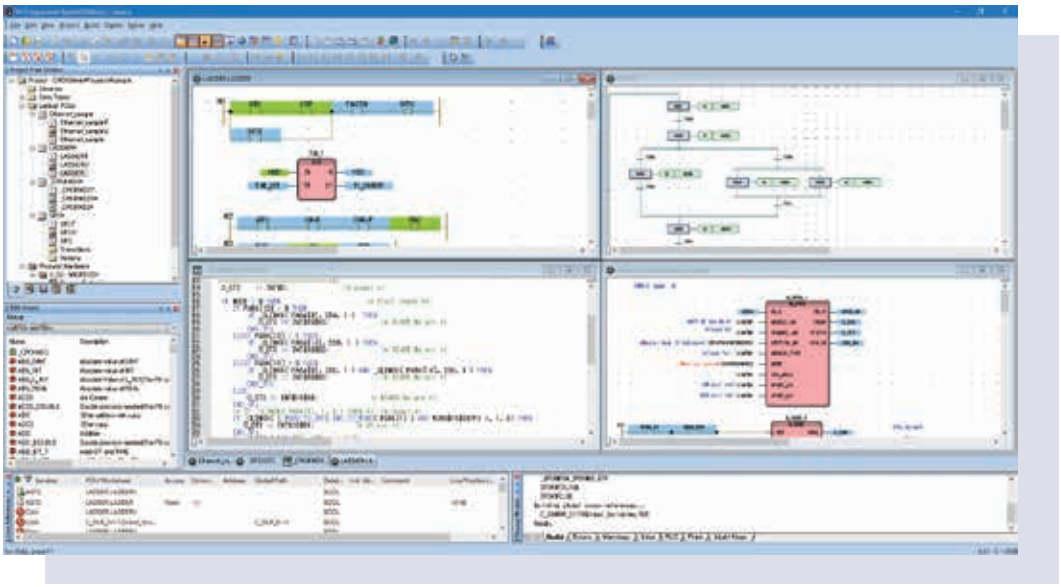

Usage

Improvement of software development efficiency

Programming in units of POU or worksheets allows the use of the structured design method by which a program is created by dividing it by functionality or process. This method enables multiple designers to divide the program design among them so that a substantial reduction in the program creation time can be achieved.

Programming of the same techniques as those of microcomputers and personal computers

The ST language is similar to the C language so that programs can be created using the same techniques as those of microcomputers and personal computers for complex calculations that are hard to implement using the Ladder language. Programs and circuits that are frequently used can easily be reused by making them FB (function blocks).

Features

Writing in multiple languages

- The Expert (D300win) completely supports five types of program representations specified by the standards.
- It allows the programmer to code the proper combination of representations for the control target.

Supported representations

IL (Instruction List)
LD (Ladder Diagram)
FBD (Function Block Diagram)
ST (Structured Text)
SFC (Sequential Function Chart)

Excellent documentation function

- The documentation preparation function has been substantially improved. Not only can it print drawing numbers, dates, page, and drawing borders, but also company logos and comments.

Simulation function

- This tool enables program test runs using the simulation function built in Expert (D300win), without using the actual unit.

Function module support function/ HMI cooperation function

- The Expert (D300win) has implemented function module support and HMI cooperation support functions as common support tools.
- The function module support can be operated with the programming supporting tool connecting CPU module.

Standard

Operability Oriented Support Tools

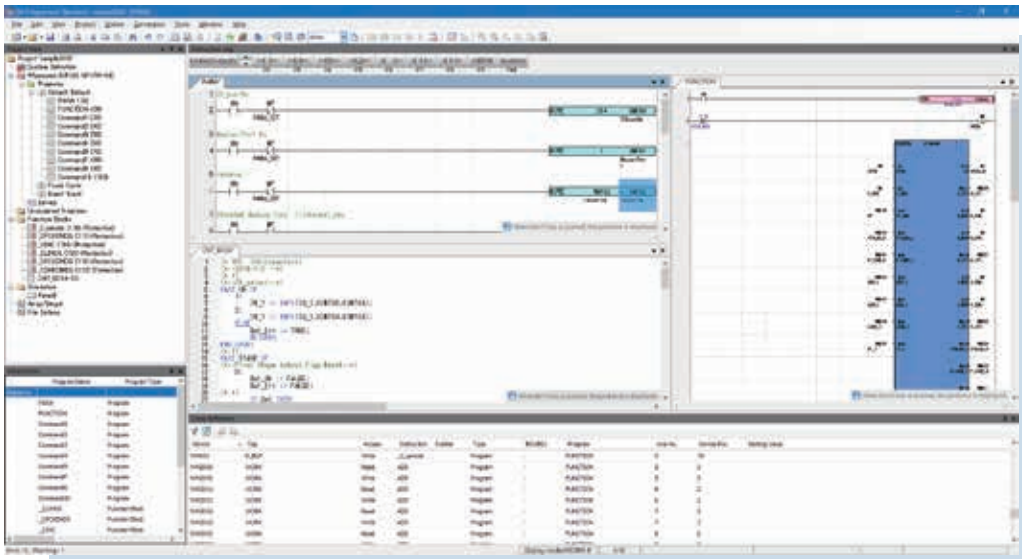

Usage

Ladder operation for on-site maintenance personnel

Supports the full keyboard operations useful for on-site maintenance personnel.
Editing and download can be performed immediately after activation.

Utilization of programming resources

Program and comment resources of the models MICREX-F series and FLEX-PC series of Fuji Electric can be reused. Screens, operability, and programming can be handled as if you were using a personal computer loader with which you are already familiar.

Features

Multi-language support

- The SPH supports not only ladder diagrams but also ST and FBD.
- It allows the programmer to select the proper programming language for the control target.

Intuitive screen operation

- Through guidance display and a command word candidate narrowing-down function based on a keyword search, you can input data without referring to the manual.
- You can select the proper input mode according to the situation from functions such as mouse wheel + click input, keyword search input, and Intellisense function input.

Simulation function

- Provided with built-in Standard, the SPH is capable of testing the operation of programs without using an actual system.

Resume function

- When the SPH starts to run, it automatically displays the position last edited or monitored.
- In online mode, the SPH displays the position last monitored and starts monitoring.
- In offline mode, the SPH displays the position last monitored and enters Edit mode.

Device editor and collation function

- Device information is displayed on a single screen, for example, in the form of a list of the operating states of devices, enabling you to save time in memory management.
- You can display details of different points on programs and edit by referring to collation results.

MEMO

Contents

*Only for Japan's doemestic market

KD03-041A

General specifications

Item		Specifications	
Physical environment	Operating ambient temperature	0 to +55˚C	IEC 61131-2 JIS B 3502
	Storage temperature	-25 to +70˚C	
	Relative humidity	20 to 95%RH (without condensation)	
	Contamination degree	Contamination degree 2 (free from conductive dust)	
	Corrosion resistance	No corrosive gas is present, no organic solvent adhesion	
	Operating altitude	Altitude of 2000 m or less (air pressure of 70 kPa or higher during transportation)	
Mechanical operating condition	Resistance to vibration	One amplitude: 0.15 mm, constant acceleration: 19.6 m/s^2, 2 hours for each direction, 6 hours total	
	Resistance to shock	Peak acceleration: 147 m/s^2, 3 times for each direction	
Electrical operating condition	Electrostatic discharge	Contact discharge ±6 kV Aerial discharge ±8 kV	IEC 61000-4-2 JIS C 61000-4-2
	Radiative radio frequency electromagnetic field	80 to 1000 MHz 10 V/m 1.4 to 2.0GHz 3 V/m 2.0 to 2.7GHz 1V/m	IEC 61000-4-3 JIS C 61000-4-3
	Fast transient burst	Power supply line and I/O signal line (AC non-shield line): ±2 kV Communication line and I/O signal line (except for AC non-shielded line): ±1 kV	IEC 61000-4-4 JIS C 61000-4-4
	Surge	AC power supply: Common mode ±2 kV, normal mode: ±1 kV DC power supply: Common mode ±0.5 kV, normal mode: ±0.5 kV	IEC 61000-4-5 JIS C 61000-4-5
	Radio frequency electromagnetic field Conducted interference	150 kHz to 80 MHz, 10 V	IEC 61000-4-6 JIS C 61000-4-6
	Power frequency magnetic field	50 Hz, 30 A/m	IEC 61000-4-8 JIS C 61000-4-8
	Square wave impulse noise	±1.5 kV, 1ns rising edge, 1 μs pulse width, 50 Hz	
Structure		Open Type device (Built-in control panel type)	
Cooling method		Natural cooling	

Power Supply Module: NP1S-□□

■Features

- Power supply module redundancy
  Redundancy of the power supply has been realized by supplying the power from multiple power supply modules. Redundant power supply units allow you to improve system reliability.
- Small capacity power supply module (NP1S-81/NP1S-91)
  The use of the 100 V AC or 200 V AC small capacity power supply module (single slot) on a 3-slot and 6-slot basis allows effective use of one slot.
- Large capacity power supply module (NP1S-22S/NP1S-62S)
  The module achieves twice the output current of the NP1S-22 using the same number of slots. Nearly all modules can be fully installed on the 13-slot base without the need of extra power supply modules to increase capacity.

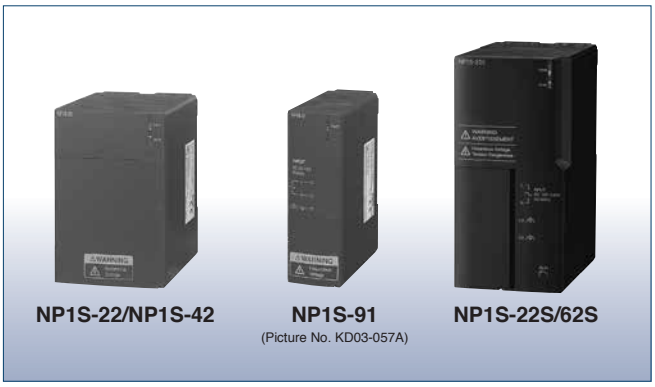

■Power supply specifications

Item	Specifications			
Model	**NP1S-22**	**NP1S-42**	**NP1S-81**	**NP1S-91**
Rated input voltage	100 to 120/200 to 240 V AC	24 V DC	200 to 240 V AC	100 to 120 V AC
Voltage tolerance	85 to 132 V AC, 170 to 264 V AC	19.2 to 30V DC	170 to 264 V AC	85 to 132 V AC
Rated frequency	50/60 Hz	—	50/60 Hz	
Dropout tolerance	1 cycle or less(Rated voltage, rated load)	10 ms or less (Rated voltage, rated load)	1 cycle or less(Rated voltage, rated load)	
AC waveform distortion factor	5% or less	—	5% or less	
Ripple factor tolerance	—	Three-phase full-wave rectification 5% or less	-	
Leakage current	0.25mA or less			
Inrush current	22.5 Ao-p or less (ambient temperature = 25˚C not repeated)	150 Ao-p or less 2 ms or less	22.5 Ao-p or less (ambient temperature = 25˚C not repeated)	
Power consumption	110 VA or less	45 W or less	50 VA or less	
Rated output voltage	24 V DC (22.8 to 26.4 V DC)			40 VA or less
Output current	0 to 1.46 A		0 to 0.625 A	
Insulation method	Transducer			
Dielectric strength	2300 V AC, 1 minute Between power input terminal and ground	510 V AC, 1 minute Between power input terminal and ground	2300 V AC, 1 minute Between power input terminal and ground	1400 V AC, 1 minute Between power input terminal and ground
Insulation resistance	10 MΩ or more with 500 V DC megger			
No. of occupied slots	2 slots		1 slot (specialized for the 3-slot and 6-slot basis)	
Alarm output	Relay NC contact output (Monitoring of output voltage: 24 V DC, 0.3 A or less)		None	
Multiple power supply	Compatible (Up to 3 units mountable on the base board.)			
Weight	Approx. 360 g		Approx. 180 g	

Item	Specifications	
Model	**NP1S-22S**	**NP1S-62S**
Rated input voltage	100 to 240 V AC	110 V AC
Voltage tolerance	85 to 264 V AC	85 to 140 V AC
Rated frequency	50/60 Hz	—
Dropout tolerance	20ms or less (Rated voltage, rated load)	10ms or less (Rated voltage, rated load)
AC waveform distortion factor	5% or less	—
Ripple factor tolerance	—	Three-phase full-wave rectification 5% or less
Leakage current	0.25mA or less	
Inrush current	20 Ao-p or less (at 100 V AC) 40 Ao-p or less (at 240 V AC) (ambient temperature = 25˚C not repeated) 1 ms or less	20 Ao-p or less (at 110 V DC) (ambient temperature = 25˚C not repeated) 1 ms or less
Power consumption	220 VA or less	90 W or less
Rated output voltage	24 V DC (23.9 to 26.1 V DC)	
Output current	0 to 2.92 A	
Insulation method	Transducer	
Dielectric strength	2300 V AC, 1 minute Between power input terminal and ground	1950 V AC, 1 minute Between power input terminal and ground
Insulation resistance	10 MΩ or more with 500 V DC megger	
No. of occupied slots	2 slots	
Alarm output	Relay NC contact output (Monitoring of output voltage: 24 V DC, 0.3 A or less)	
Multiple power supply	Compatible (Up to 3 units mountable on the base board.)	
Weight	Approx. 600 g	

CPU Module: NP1P□-□□

■Features

- Ultra-high-speed processing
  Regarding the basic instructions, the CPU module carries out ultra-high-speed processing as below:
  SPH3000MG: 6 ns SPH3000/SPH3000MM: 9 ns
  SPH300: 20 ns SPH2000: 30 ns SPH200: 70 ns
- Multi CPU configuration (SPH200 excluded)
  Up to 8 CPUs can be configured. High-speed control is performed through load distribution.
- Redundancy (SPH300/SPH2000)
  1:1 warm-standby feature and N:1 backup feature improves the system safety and reliability.
  (N:1 backup feature is supported only by SPH300.)
- IEC 61131-3
  Complete compliance with the IEC 61131-3 international standard language This enables results of programming to be comprehended worldwide.

■Performance specifications

		SPH300					SPH300EX
Model		**NP1PS-32**	**NP1PS-32R**	**NP1PS-74R**	**NP1PS-117R**	**NP1PS-245R**	**NP1PS-74D**
Control system		Stored program Cyclic scanning system (default task), periodic task, event task					
I/O connection method		Direct connection I/O (SX bus), remote I/O (DeviceNet, OPCN-1, and other remote I/O links)					
I/O control system		SX bus: Tact synchronization refresh. Remote I/O link: Refresh by a remote master at 10-ms fixed intervals (not synchronized with scan)					
CPU		32-bit OS processor, 32-bit execution processor					
Programming language		IEC 61131-3 conformed IL language (Instruction List), ST language (Structured Text), LD language (Ladder Diagram) FBD language (Function Block Diagram), SFC element (Sequential Function Chart)					
Instruction execution speed	Sequence instruction	20 ns or more/instruction					
	Applied instruction	40 ns or more/instruction					
No. of I/O points		8,192 points					
User memory		97 Kwords		277 Kwords	491 Kwords	1,003 Kwords	277×2+6 Kwords
	Program memory	65,536 words		151,552 words	239,616 words	501,760 words	151,552×2 words
		32,768 steps		75,776 steps	119,808 steps	250,880 steps	75,776×2 steps
	Data memory	33,792 words		132,096 words	263,168 words	525,312 words	132,096 × 2 + 6,144 words
Available basic data type *1		BOOL, INT, DINT, UINT, UDINT, REAL, TIME, DATE, TOD, DT, STRING, WORD, DWORD					
Number of tasks *2		Default tasks (Cyclic scanning): 1 Periodic task : 4 Event tasks : 4 } Up to 4 in total					The tasks shown to the left are available to each of the basic CPU and extension CPU.
No. of POUs in program		2000 (including POUs in the library)					
Interface *2	User ROM card (CF/SD)	-	○ CF CARD	○ CF CARD	○ CF CARD	○ CF CARD	○ CF CARD
	USB *3	-	○	○	○	○	○
	Ethernet *4	-	-	-	-	-	-
Diagnostic function		Self-diagnosis (memory check, ROM sum check), system configuration monitoring, module fault monitoring					
Security function		Set limits to download/upload of the projects, reference, and clear etc., by the password.					
Calendar		Up to 31 Dec. 2069 23:59:59 Precision : 27sec/month (when active) When multi-CPU system is used, time is synchronized.					
Battery backup *6		Backup range: Data memory, calendar IC memory, RAS area Battery used: Lithium primary battery Backup time (at 25˚C) NP1PS-32/32R: 5 years NP1PS-74R/117R: Approx. 1.3 years NP1PS-245R: Approx. 0.7 years NP1PS-74D: Approx. 0.65 years } Using the optionally available large-capacity battery makes the backup time two to three times longer. Replacement time (at 25°C): within 5 minutes					
Memory backup by flash memory		Application programs, system definitions, and ZIP files can be saved in the flash memory built in the CPU.					
Memory backup by user ROM card (optional)		Application programs, system definitions, zip files, compressed projects and User's data can be saved in user ROM card (compact flash card).					
No. of occupied slots		1 slot					2 slots
Internal current consumption		24 V DC, 200 mA or less					
Weight		Approx. 200 g			Approx. 220 g		Approx. 410 g

*1 This depends on each instruction.
*2 ○: Standard component -: Not equipped
*3 Specifications of USB (The USB is to be used exclusively for programming support tools.)
Applicable standard of USB: USB1.1
USB connector: USB-B type (**NP1PS-32R/75D/74R/117R/245R**), USB-miniB type (**NP1PM-48R/48E/256E/256H**, **NP1PU-048E/128E/256E**, **NP1PU2-048E/256E, NP1PU1-256NE**).

- Compatible with USB and user ROM
  The SPH300/SPH2000/SPH3000/SPH3000MM/SPH3000MG of the USB and user ROM versions with separate formats are offered.
- Large-capacity battery (optionally available)
  By adding the optional large-capacity battery to SPH300 (74K/117K/245K step), the memory backup time can be extended to a max. of 3.5 years (at 25˚C).

	SPH2000				SPH200			
	NP1PM-48R	**NP1PM-48E**	**NP1PM-256E**	**NP1PM-256H**	**NP1PH-08**	**NP1PH-16**	Model	
	Stored program Cyclic scanning system (default task), periodic task, event task						Control system	
	Direct connection I/O (SX bus), remote I/O (DeviceNet, OPCN-1, and other remote I/O links)						I/O connection method	
	SX bus: Tact synchronization refresh. Remote I/O link: Refresh by a remote master at 10-ms fixed intervals (not synchronized with scan)						I/O control system	
	32-bit RISC processor				16-bit OS processor, 16-bit execution processor		CPU	
	IEC 61131-3 conformed IL language (Instruction List), ST language (Structured Text), LD language (Ladder Diagram) FBD language (Function Block Diagram), SFC element (Sequential Function Chart)						Programming language	
	30 ns or more/instruction				70 ns or more/instruction		Sequence instruction	Instruction execution speed
	40 ns or more/instruction				140 ns or more/instruction		Applied instruction	
	8,192 points						No. of I/O points	
	193 Kwords		2,561 Kwords		29 Kwords	57 Kwords	User memory	
	98,304 words		524,288 words		16,384 words	32,768 words	Program memory	
	49,152 steps		262,144 steps		8,192 steps	16,384 steps		
	99,328 words		2,098,176 words		13,312 words	25,600 words	Data memory	
	BOOL, INT, DINT, UINT, UDINT, REAL, TIME, DATE, TOD, DT, STRING, WORD, DWORD						Available basic data type *1	
	Default tasks (Cyclic scanning): 1 Periodic task : 4 Event tasks : 4 } Up to 4 in total						Number of tasks *2	
	2000 (including POUs in the library)						No. of POUs in program	
	○ CF CARD	○ CF CARD	○ CF CARD	○ CF CARD	ROM for SPH200	ROM for SPH200	User ROM card (CF/SD)	Interface *2
	○	○	○	○	-	-	USB *3	
	-	○	○	○ *5	-	-	Ethernet *4	
	Self-diagnosis (memory check, ROM sum check), system configuration monitoring, module fault monitoring						Diagnostic function	
	Set limits to download/upload of the projects, reference, and clear etc., by the password.						Security function	
	Up to 31 Dec. 2069 23:59:59 Precision: 27sec/month (when active) When multi-CPU system is used, time is synchronized.				Up to 31 Dec. 2069 23:59:59 Precision: 27 seconds/month		Calendar	
	Backup range: Data memory, calendar IC memory, RAS area Battery used: Lithium primary battery Backup time (at 25˚C): 5 years Replacement time (at 25°C): within 5 minutes				Backup range: Application program system definition, ZIP file, data memory, calendar IC memory, RAS area Battery used: Lithium primary battery Backup time (at 25˚C): 5 years Replacement time (at 25°C): within 5 minutes		Battery backup *6	
	Application programs, system definitions, and ZIP files can be saved in the flash memory built in the CPU.				Application programs, system definitions, and ZIP files can be saved in the user ROM card.		Memory backup by flash memory	
	Application programs, system definitions, zip files, compressed projects and User's data can be saved in user ROM card (compact flash card).				Application programs, system definitions, and ZIP files can be saved.		Memory backup by user ROM card (optional)	
	1 slot						No. of occupied slots	
	24 V DC, 200 mA or less				24 V DC, 85 mA or less		Internal current consumption	
	Approx. 220 g				Approx. 170 g		Weight	

*4 The Ethernet interface is 10 Base-T/100 Base-TX.
*5 Ethernet interface is for equalization only during redundancy, so it is not available for general-purpose communications.
*6 Backup time (25°C) when using the optionally available large-capacity battery:
NP1PS-74R: Approx. 3.5 years
NP1PS-117R: Approx. 3.5 years
NP1PS-245R: Approx. 2 years
NP1PS-74D: Approx. 1.75 years

CPU Module

Performance specifications

		SPH3000			SPH3000D			
Model		**NP1PU-048E**	**NP1PU-128E**	**NP1PU-256E**	**NP1PU-048EZM**	**NP1PU-096EZM**	**NP1PU-0128EZM**	**NP1PU-256EZM**
Control system		Stored program Cyclic scanning system (default task), periodic task, event task						
I/O connection method		Direct connection I/O (SX bus), remote I/O (DeviceNet, OPCN-1, and other remote I/O links)						
I/O control system		SX bus: Tact synchronization refresh. Remote I/O link: Refresh by a remote master at 10-ms fixed intervals (not synchronized with scan)						
CPU		32-bit RISC processor						
Programming language		IEC 61131-3 conformed IL language (Instruction List), ST language (Structured Text), LD language (Ladder Diagram) FBD language (Function Block Diagram), SFC element (Sequential Function Chart)						
Instruction execution speed	Sequence instruction	9 ns or more/instruction						
	Applied instruction	8 ns or more/instruction						
No. of I/O points		8,192 points						
	SX bus	8,192 points						
	E-SX bus0/E-SX bus1	-						
User memory		353 Kwords	1,281 Kwords	2,561 Kwords	545 Kwords	1,409 Kwords	1,473 Kwords	2,753 Kwords
	Program memory	98,304 words	262.144 words	524,288 words	98,304 words	196,608 words	262,144 words	524,288 words
		49,152 steps	131,072 steps	262,144 steps	49,152 steps	98,304 steps	131,072 steps	262,144 steps
	SX bus	98,304 words	262,144 words	524,288 words	98,304 words	196,608 words	262,144 words	524,288 words
		49,152 steps	131,072 steps	262,144 steps	49,152 steps	98,304 steps	131,072 steps	242,144 steps
	E-SX bus0/E-SX bus1	-						
		-						
	Data memory	263,168 words	1,049,600 words	2,098,176 words	459,776 words	1,246,208 words	1,246,208 words	2,294,784 words
	SX bus	263,168 words	1,049,600 words	2,098,176 words	459,776 words	1,246,208 words	1,246,208 words	2,294,784 words
	E-SX bus0/E-SX bus1	-						
Available basic data type *1		BOOL, INT, DINT, UINT, UDINT, REAL, TIME, DATE, TOD, DT, STRING, WORD, DWORD						
Number of tasks		SX bus Default tasks (Cyclic scanning): 1 Periodic task : 4 } Up to 4 in total Event tasks : 4 } Up to 4 in total						
No. of POUs in program		2000 (including POUs in the library)						
Interface	User ROM card (CF/SD)	○ SD memory card						
	USB *2	○						
	Ethernet *3	○						
Diagnostic function		Self-diagnosis (memory check, ROM sum check), system configuration monitoring, module fault monitoring						
Security function		Set limits to download/upload of the projects, reference, and clear etc., by the password.						
Calendar		Up to 31 Dec. 2069 23:59:59 Precision: 27sec/month (when active) When multi-CPU system is used, time is synchronized.						
Battery backup		Backup range: Data memory, calendar IC memory, RAS area Battery used: Lithium primary battery Backup time (at 25˚C): 5 years Replacement time (at 25°C): within 5 minutes						
Memory backup by flash memory		Application programs, system definitions, and ZIP files can be saved in the flash memory built in the CPU.						
Memory backup by user ROM card (optional)		Application programs, system definitions, zip files, compressed projects and User's data can be saved in user ROM card (compact flash card).						
No. of occupied slots		1 slot						
Internal current consumption		24 V DC, 200 mA or less						
Weight		Approx. 220 g						

*1 This depends on each instruction.
*2 Specifications of USB (The USB is to be used exclusively for programming support tools.)
Applicable standard of USB: USB1.1
USB connector: USB-B type (**NP1PS-32R/74D/74R/117R/245R**), USB-miniB type (**NP1PM-48R/48E/256E/256H, NP1PU-048EZM/096EZM/128EZM/256EZM, NP1PU2-048E/256E, NP1PU1-256NE**).
*3 The Ethernet interface is 10 Base-T/100 Base-TX (SPH3000, SPH3000D, SPH3000PN, SPH3000MM, SPH3000MG)

Performance specifications

			SPH3000MM	
Model			**NP1PU2-048E**	**NP1PU2-256E**
Control system			Stored program Cyclic scanning system (default task), periodic task, event task	
I/O connection method			Direct connection I/O (SX bus), remote I/O (T-links, DeviceNet, PROFIBUS, and other remote I/O links)	
I/O control system			SX bus: SX bus tact synchronization refresh. E-SX bus: E-SX bus tact synchronization refresh. Remote I/O link: Refresh by a remote master at 10-ms fixed intervals (not synchronized with scan)	
CPU			32-bit RISC processor × 3	
Programming language			IEC 61131-3 conformed IL language (Instruction List), ST language (Structured Text), LD language (Ladder Diagram) FBD language (Function Block Diagram), SFC element (Sequential Function Chart)	
Instruction execution speed	Sequence instruction		9 ns or more/instruction	
	Applied instruction		8 ns or more/instruction	
No. of I/O points			139,264 points	
	SX bus		8,192 points	
	E-SX bus0/E-SX bus1		65,536/65,536 points	
User memory			1234.5 Kwords	5650.5 Kwords
	Program memory		196,608 words	1,048,576 words
			98,304 steps	524,288 steps
		E-SX bus0/E-SX bus1	98,304/98,304 words	524,288/524,288 words
			49,152/49,152 steps	262,144/262,144 steps
	Data memory		1,067,520 words	4,737,536 words
		Common multi	132,608 words	132,608 words
		E-SX bus0/E-SX bus1	467,456/467,456 words	2,302,464/2,302,464 words
Available basic data type *1			BOOL, INT, DINT, UINT, UDINT, REAL, TIME, DATE, TOD, DT, STRING, WORD, DWORD	
Number of tasks *2			E-SX bus0/E-SX bus1 Default tasks (Cyclic scanning): 1 Periodic task : 4 Event tasks : 4 } Up to 4 in total	
No. of POUs in program			2000 (including POUs in the library)	
Interface	User ROM card		SD memory card	
	USB *3		miniB connector x 1 port (for programming tool connection)	
	Ethernet		10BASE-T/100BASE-TX (auto-negotiation, AUTO MDI/MDI-X compatible)	
Diagnostic function			Self-diagnosis (memory check, ROM sum check), system configuration monitoring, module fault monitoring	
Security function			Set limits to downloading/uploading of the projects, reference, and clear etc., with a password.	
Calendar			Up to 31 Dec. 2069 23:59:59 Precision: 27sec/month (when active) When multi-CPU system is used, time is synchronized.	
Battery backup			Backup range: Data memory, calendar IC memory, RAS area Battery used: Lithium primary battery Backup time (at 25°C): 5 years Replacement time (at 25°C): within 5 minutes	
Memory backup by flash memory			Application programs, system definitions, and ZIP files can be saved in the flash memory built in the CPU.	
Memory backup by user ROM card (optional)			Application programs, system definitions, zip files, compressed projects and User's data can be saved.	
No. of occupied slots			2 slots	
Internal current consumption			24 V DC 360 mA	
Weight			Approx. 420 g	

*1 This depends on each instruction.
*2 SPH3000MM contains one SX bus and two E-SX buses. The number of tasks available for each of these buses is shown in the table.
*3 Applicable standard of USB: USB1.1

Performance specifications

	SPH3000MG	SPH5000H	BACnet MS/TP CPU*
Model	**NP1PU1-256NE**	**NP1PU1-512H**	**NP1PUBM-048C**
Control system	Stored program Cyclic scanning system (default task), periodic task, event task		
I/O connection method	Direct connection I/O (SX bus), remote I/O (T-link, DeviceNet, PROFIBUS, and other remote I/O links)		Direct connection I/O (SX bus), remote I/O (T-links, DeviceNet, PROFIBUS, and other remote I/O links)
I/O control system	SX bus: SX bus tact synchronization refresh. E-SX bus: E-SX bus tact synchronization refresh. Remote I/O link: Refresh by a remote master at 10-ms fixed intervals (not synchronized with scan)		SX bus: Tact synchronization refresh. Remote I/O link: Refresh by a remote master at 10-ms fixed intervals (not synchronized with scan)
CPU	32-bit RISC processor × 2		32-bit RISC processor
Programming language	IEC 61131-3 conformed IL language (Instruction List), ST language (Structured Text), LD language (Ladder Diagram) FBD language (Function Block Diagram), SFC element (Sequential Function Chart)		
Instruction execution speed – Sequence instruction	6 ns or more/instruction		9 ns or more/instruction
Instruction execution speed – Applied instruction	5 ns or more/instruction		8 ns or more/instruction
No. of I/O points	73,727 points	65,536 points	8,192 points
SX bus	8,192 points	-	8,192 points
E-SX bus0/E-SX bus1	65,536 points		-
User memory			
Program memory	524,288 words	1,048,576 words	98,304 words
	262,144 steps	524,288 steps	49,152 steps
SX bus	-		98,304 words
	Note) There are no tasks synchronized with the SX bus.		49,152 steps
E-SX bus0/E-SX bus1	524,288 words	1,048,576 words	-
	262,144 steps	524,288 steps	-
Data memory			
Multi	132,096 words	-	263,168 words
E-SX bus0/E-SX bus1	2,302,464 words	2,302,464 words	-
Available basic data type *1	BOOL, INT, DINT, UINT, UDINT, REAL, TIME, DATE, TOD, DT, STRING, WORD, DWORD		
Number of tasks *2	E-SX bus Default tasks (Cyclic scanning): 1 Periodic task : 4 } Up to 4 Event tasks : 4 } in total		SX bus Default tasks (Cyclic scanning): 1 Periodic task : 4 } Up to 4 Event tasks : 4 } in total
No. of POUs in program	2000 (including POUs in the library)		2000 (including POUs in the library)
Interface – User ROM card	SD memory card		
Interface – USB *3	miniB connector x 1 port (for programming tool connection)		
Interface – Ethernet	10BASE-T/100BASE-TX (auto-negotiation, AUTO MDI/MDI-X compatible)	10BASE-T, 100BASE-TX, 1000BASE-T	-
Diagnostic function	Self-diagnosis (memory check, ROM sum check), system configuration monitoring, module fault monitoring		
Security function	Set limits to downloading/uploading of the projects, reference, and clear etc., with a password.		
Calendar	Up to 31 Dec. 2069 23:59:59 Precision: 27sec/month (when active) When multi-CPU system is used, time is synchronized.		
Battery backup	Backup range: Data memory, calendar IC memory, RAS area Battery used: Lithium primary battery Backup time (at 25˚C): 5 years Replacement time (at 25°C): within 5 minutes	Backup range: Calendar IC memory *4 Battery used: Lithium primary battery Backup period (at 25°C): 5 years Replacement time: within 5 minutes (at 25°C)	Backup range: Data memory, calendar IC memory, RAS area Battery used: Lithium primary battery Backup time (at 25°C): 5 years Replacement time (at 25°C): within 5 minutes
Memory backup by flash memory	Application programs, system definitions, and ZIP files can be saved in the flash memory built in the CPU.		
Memory backup by user ROM card (optional)	Application programs, system definitions, ZIP files, compressed projects, and user data can be saved.		
No. of occupied slots	2 slots		1 slot
Internal current consumption	24 V DC 650 mA	24 V DC 600 mA	24 V DC, 380 mA or less
Weight	Approx. 450 g	Approx. 600 g	Approx. 220 g

*Only for Japan's doemestic market
*1 This depends on each instruction.
*2 One SX bus and two E-SX buses. The number of tasks available for each of these buses is shown in the table.
Note) There are no tasks synchronized with the SX bus.
*3 Applicable standard of USB: USB1.1
*4 Retain memory and RAS information
*5 This indicates the current value used to charge the module's built-in capacitor when turned on. During steady-state operation, it is 200 mA or less.

CPU Module

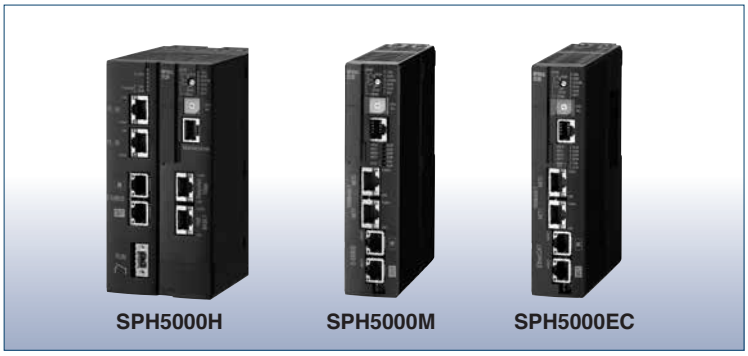

		SPH5000M			
Model		**NP1PA1-096E**	**NP1PA1-128E**	**NP1PA1-256E**	**NP1PA1-512E**
Control system		Stored program Cyclic scanning system (default task), periodic task, event task			
I/O connection method		Direct connection I/O (SX bus/ E-SX bus), remote I/O (T-links, DeviceNet, PROFIBUS, and other remote I/O links)			
I/O control system		SX bus: SX bus tact synchronization refresh or refresh by a CPU module at 10-ms fixed intervals E-SX bus: E-SX bus tact synchronization refresh or refresh by a CPU module at 10-ms fixed intervals Remote I/O link: Refresh by a remote master at 10-ms fixed intervals (not synchronized with scan)			
Task synchronization bus specification		Either the SX bus or E-SX bus is specified as the synchronization bus for the task.			
CPU		32-bit RISC processor, dual core			
Programming language		IEC 61131-3 conformed IL language (Instruction List), ST language (Structured Text), LD language (Ladder Diagram), FBD language (Function Block Diagram), SFC element (Sequential Function Chart)			
Instruction execution speed	Sequence instruction	4 ns or more/instruction			
	Applied instruction	LD WORD 0.9 ns or more/instruction, ADD UDINT 4 ns or more/instruction			
No. of I/O points		73,728 points			
	SX bus	8,192 points			
	E-SX bus	65,536 points			
User memory					
	Program memory (shared by two application control units)	96 Ksteps	128 Ksteps	256 Ksteps	512 Ksteps
	Data memory *1	Max. 1,840 kW		Max. 3,184 kW	Max. 6,144 kW
Available basic data type *2		BOOL, INT, UINT, DINT, UDINT, REAL, TIME, DATE, TOD, DT, STRING, WORD, DWORD			
Number of tasks *3		Default tasks (Cyclic scanning): 1 Periodic tasks : 4 } Up to 4 Event tasks : 4 } in total			
No. of POUs in program		2000 (including POUs in the library)			
Interface	User ROM card	SD memory card, SDHC memory card			
	USB *4	miniB connector x 1 port (for programming tool connection)			
	Ethernet	100BASE-TX/1000BASE-T			
Diagnostic function		Self-diagnosis (memory check, ROM sum check), system configuration monitoring, module fault monitoring			
Security function		Set limits to downloading/uploading of the projects, reference, and clear etc., with a password.			
Calendar		Up to 31 Dec. 2069 23:59:59 Precision: 27sec/month (when active) When multi-CPU system is used, time is synchronized.			
Battery backup *5		Backup range: Calendar IC memory Battery used: Lithium primary battery Replacement time (at 25°C): within 5 minutes Backup time (at 25°C): 5 years			
Memory backup by flash memory and nonvolatile RAM		Saves application programs, system definitions, and zip files in flash memory. Stores retained memory, RAS, and logging and trace settings in nonvolatile RAM.			
Memory backup by user ROM card (optional)		Application programs, system definitions, zip files, compressed projects and User's data can be saved.			
No. of occupied slots		1 slot			
Internal current consumption *6		24 V DC, 700 mA or less			
Weight		Approx. 420 g			

*1 This is the total of the shared and private areas used by two application control units.
*2 This depends on each instruction.
*3 The periodic task must be an integer multiple of the bus tact specified for synchronization. If it is not, an error will occur and the task will not run.
*4 Applicable standard of USB: USB2.0
*5 Stored data, such as retained memory and RAS information, is automatically backed up to the CPU's built-in nonvolatile memory when the SPH5000M is powered off. This means that there is no need for battery backup for those memories. However, if calendar memory backup is required, please purchase an optional battery (NP8P-BT).
*6 The SPH5000M must be installed in an EP bus-compatible slot on an EP bus-compatible baseboard.

Performance specifications

		SPH5000EC			
Model		**NP1PA1C-096E**	**NP1PA1C-128E**	**NP1PA1C-256E**	**NP1PA1C-512E**
Control system		Stored program Cyclic scanning system (default task), periodic task, event task			
I/O connection method		Direct connection I/O (SX bus / EtherCAT), remote I/O (T-links, DeviceNet, PROFIBUS, and other remote I/O links)			
I/O control system		EtherCAT: EtherCAT tact synchronization refresh SX bus: Refresh by a CPU module at fixed intervals Remote I/O link: Refresh by a remote master at fixed intervals (not synchronized with scan)			
Task synchronization bus specification		Only EtherCAT can be selected			
CPU		32-bit RISC processor, dual core			
Programming language		IEC 61131-3 conformed IL language (Instruction List), ST language (Structured Text), LD language (Ladder Diagram), FBD language (Function Block Diagram), SFC element (Sequential Function Chart)			
Instruction execution speed	Sequence instruction	4 ns or more/instruction			
	Applied instruction	LD WORD 0.9 ns or more/instruction, ADD UDINT 4 ns or more/instruction			
No. of I/O points		73,728 points			
	SX bus	8,192 points			
	EtherCAT	65,536 points			
User memory					
	Program memory (shared by two application control units)	96Kstep	128Kstep	256Kstep	512Kstep
	Data memory *1	Max. 1,840 kW		Max. 3,184 kW	Max. 6,144 kW
Available basic data type *2		BOOL, INT, UINT, DINT, UDINT, REAL, TIME, DATE, TOD, DT, STRING, WORD, DWORD			
Number of tasks *3		Default tasks (Cyclic scanning): 1 Periodic tasks : 4 } Up to 4 Event tasks : 4 } in total			
No. of POUs in program		2000 (including POUs in the library)			
Interface	User ROM card	SD memory card, SDHC memory card			
	USB *4	miniB connector x 1 port (for programming tool connection)			
	Ethernet	100BASE-TX/1000BASE-T			
Diagnostic function		Self-diagnosis (memory check, ROM sum check), system configuration monitoring, module fault monitoring			
Security function		Set limits to downloading/uploading of the projects, reference, and clear etc., with a password.			
Calendar		Up to 31 Dec. 2069 23:59:59 Precision: 27sec/month (when active) When multi-CPU system is used, time is synchronized.			
Battery backup *5		Backup range: Calendar IC memory Battery used: Lithium primary battery Replacement time (at 25°C): within 5 minutes Backup time (at 25°C): 5 years			
Memory backup by flash memory and nonvolatile RAM		Application programs, system definitions, and ZIP files can be saved in the flash memory. Retain memory, RAS, and logging and trace settings can be saved in the nonvolatile RAM.			
Memory backup by user ROM card (optional)		Application programs, system definitions, zip files, compressed projects and User's data can be saved.			
No. of occupied slots *6		1 slot			
Internal current consumption		24 V DC, 700 mA or less			
Weight		Approx. 420 g			

*1 This is the total of the shared and private areas used by two application control units.
*2 This depends on each instruction.
*3 The periodic task must be an integer multiple of the bus tact specified for synchronization. If it is not, an error will occur and the task will not run.
*4 Applicable standard of USB: USB2.0
*5 Stored data, such as retained memory and RAS information, is automatically backed up to the CPU's built-in nonvolatile memory when the SPH5000EC is powered off. This means that there is no need for battery backup for those memories. However, if calendar memory backup is required, please purchase an optional battery (NP8P-BT).
*6 The SPH5000EC must be installed in an EP bus-compatible slot on an EP bus-compatible baseboard.
Note: Currently, SPH5000EC is compatible with the programming support tool Expert (D300win). We are also planning to support the programming support tool Standard in the future.

Performance specifications (user memory detail)

	SPH300					SPH300EX
Model	**NP1PS-32**	**NP1PS-32R**	**NP1PS-74R**	**NP1PS-117R**	**NP1PS-245R**	**NP1PS-74D**
User memory	97 Kwords		277 Kwords	491 Kwords	1,003 Kwords	277×2+6 Kwords
Program memory	65,536 words		151,552 words	239,616 words	501,760 words	151,552×2 words
	32,768 steps		75,776 steps	119,808 steps	250,880 steps	75,776 × 2 steps
Data memory	33,792 words		132,096 words	263,168 words	525,312 words	132,096 × 2 + 6,144 words
I/O memory	512 words					512×2 words
Non-retain memory	8,192 words		32,768 words	131,072 words	262,144 words	32,768 × 2 words
Retain memory	4,096 words		16,384 words	32,768 words	130,048 words	16,384 × 2 words
User FB memory	4,096 words		16,384 words	32,768 words	66,560 words	16,384 × 2 words
System FB memory	16,384 words		65,536 words			65,536 × 2 words
Edge detection	1,024 points		4,096 points			4,096 x 2 points
Counter	256 points		1,024 points			1,024 x 2 points
Integrating timer	128 points		512 points			512 x 2 points
Timer	512 points		2,048 points			2,048 x 2 points
Others	8,192 words		32,768 words			32,768 × 2 words
System memory	512 words					512 × 2 words
Common memory	-					6,144 words

	SPH2000				SPH200	
Model	**NP1PM-48R**	**NP1PM-48E**	**NP1PM-256E**	**NP1PM-256H**	**NP1PH-08**	**NP1PH-16**
User memory	193 Kwords		2,561 Kwords		29 Kwords	57 Kwords
Program memory	98,304 words		524,288 words		16,384 words	32,768 words
	49,152 steps		262,144 steps		8,192 steps	16,384 steps
Data memory	99,328 words		2,098,176 words		13,312 words	25,600 words
I/O memory	512 words					
Non-retain memory	65,536 words		1,703,936 words		4,096 words	8,192 words
Retain memory	8,192 words		237,568 words		2,048 words	4,096 words
User FB memory	8,192 words		73,728 words		2,048 words	4,096 words
System FB memory	16,384 words		81,920 words		4,096 words	8,192 words
Edge detection	1,024 points		5,120 words		256 points	512 points
Counter	256 points		1,280 words		64 points	128 points
Integrating timer	128 points		640 words		32 points	64 points
Timer	512 points		2,560 words		128 points	256 points
Others	8,192 words		40,960 words		2,048 words	4,096 words
System memory	512 words					
Common memory	-					

	SPH3000		
Model	**NP1PU-048E**	**NP1PU-128E**	**NP1PU-256E**
User memory	353 Kwords	1,281 Kwords	2,561 Kwords
Program memory	98,304 words	262,144 words	524,288 words
	49,152 steps	131,072 steps	262,144 steps
Data memory	263,168 words	1,049,600 words	2,098,176 words
SX bus	263,168 words	1,049,600 words	2,098,176 words
I/O memory	512 words		
Non-retain memory	98,304 words	786,432 words	1,703,936 words
Retain memory	40,960 words	122,880 words	237,568 words
User FB memory	40,960 words	57,344 words	73,728 words
System FB memory	81,920 words		
Edge detection	5,120 points		
Counter	1,280 points		
Integrating timer	640 points		
Timer	2,560 points		
Others	40,960 words		
System memory	512 words		

Note: Area sizes of the non-retain memory, the retain memory, the user FB memory and the system FB memory can be changed.

■Performance specifications (user memory detail)

					SPH3000D			
Type					**NP1PU-048EZM**	**NP1PU-096EZM**	**NP1PU-256EZM**	**NP1PU-256EZM**
User memory					545 k words	1,409 k words	1,473 k words	2,753 k words
	Program memory				98,304 words	196,608 words	262,144 words	524,288 words
					49,152 steps	98,304 steps	131,072 steps	262,144 steps
	Data memory				459,776 words	1,246208 words	1,246,208 words	2,294,784 words
		SX bus			459,776 words	1,246208 words	1,246,208 words	2,294,784 words
			I/O memory		512 words			
			Non-retain memory		98,304 words	786,432 words	786,432 words	1,703,936 words
			Retain memory		40,960 words	122,880 words	122,880 words	237,568 words
			User FB memory		172,032 words	188,416 words	188,416 words	204,800 words
			System FB memory		147,456 words			
				Edge detection	10,240 points			
				Counter	6,144 points			
				Integrating timer	1,024 points			
				Timer	6,144 points			
				Others	45,056 words			
			System memory		512 words			

					3000MM	
Model					**NP1PU2-048E**	**NP1PU2-256E**
User memory					1234.5 Kwords	5650.5 Kwords
	Program memory				196,608 words	1,048,576 words
					98,304 steps	524,288 steps
		SX bus			-	
					-	
		E-SX bus 0			98,304 words	524,288 words
					49,152 steps	262,144 steps
		E-SX bus 1			98,304 words	524,288 words
					49,152 steps	262,144 steps
	Data memory					
		SX bus				
			I/O memory		512 words	
			Non-retain memory		65,536 words	
			Retain memory		65,536 words	
			User FB memory		-	
			System FB memory		-	
				Edge detection	-	
				Counter	-	
				Integrating timer	-	
				Timer	-	
				Others	-	
			System memory		512 words	
			Common memory		512 words	
		E-SX bus 0				
			I/O memory		4,096 words	
			Non-retain memory		98,304 words	1,703,936 words
			Retain memory		40,960 words	237,568 words
			User FB memory		172,032 words	204,800 words
			System FB memory		147,456 words	
				Edge detection	10,240 points	
				Counter	6,144 points	
				Integrating timer	1,024 points	
				Timer	6,144 points	
				Others	45,056 words	
			System memory		4,608 words	
		E-SX bus 1				
			I/O memory		4,096 words	
			Non-retain memory		98,304 words	1,703,936 words
			Retain memory		40,960 words	237,568 words
			User FB memory		172,032 words	204,800 words
			System FB memory		147,456 words	
				Edge detection	10,240 points	
				Counter	6,144 points	
				Integrating timer	1,024 points	
				Timer	6,144 points	
				Others	45,056 words	
			System memory		4,608 words	

Note: Area sizes of the non-retain memory, the retain memory, the user FB memory and the system FB memory can be changed.

■Performance specifications (user memory detail)

				SPH3000MG	SPH5000H	BACnetCPU *3
Model				**NP1PU1-256NE**	**NP1PU1-512H**	**NP1PUBM-048C**
User memory						
	Program memory			524,288 words	1,048,576 words	98,304 word
				262,144 steps	524,288 steps	49,152 steps
	Data memory					
		I/O memory (SX bus)		512 words	-	512 words
		I/O memory (E-SX bus)		4,096 words		-
		Non-retain memory		1,703,936 words		98,304 words
		Retain memory		237,568 words	262,144 words	40,960 words
		User FB memory		204,800 words	65,536 words	40,960 words
		System FB memory		147,456 words	65,536 words	81,920 words
			Edge detection	10,240 points	4,096 points	5,120 points
			Counter	6,144 points	1,024 points	1,280 points
			Integrating timer	1,024 points	512 points	640 points
			Timer	6,144 points	2,048 points	2,560 points
			Others	45,056 words	32,768 words	40,960 words
		System memory				512 words
			SX bus	512 words	512 words	512 words
			E-SX bus	4,608 words	33,280 words	-
			Built-in FL-net	-	512 words	-

				SPH5000M			
Model				**NP1PA1-096E**	**NP1PA1-128E**	**NP1PA1-256E**	**NP1PA1-512E**
User memory							
	Program memory			196,608 words	262,144 words	524,288 words	1,048,576 words
				98,304 steps	131,072 steps	262,144 steps	524,288 steps
	Data memory						
		I/O memory (SX bus)		512 words			
		I/O memory (E-SX bus)		4,096 words			
		Non-retain memory	*1	1,310,720 words		2,621,440 words	5,242,880 words
		Retain memory	*1	573,440 words		638,976 words	1,048,576 words
		User FB memory	*2	212,992×2 words		294,912×2 words	376,832×2 words
		System FB memory	*2	147,456×2 words			
			Edge detection	10,240×2 points			
			Counter	6,144×2 points			
			Integrating timer	1,024×2 points			
			Timer	6,144×2 points			
			Others	45,056×2 words			
		System memory					
			SX bus	512 words			
			APL0/1+E-SX bus	1,024 words			
			E-SX bus integrated type	16,384 words			

				SPH5000EC			
Model				**NP1PA1C-096E**	**NP1PA1C-128E**	**NP1PA1C-256E**	**NP1PA1C-512E**
User memory							
	Program memory			196,608 words	262,144 words	524,288 words	1,048,576 words
				98,304 steps	131,072 steps	262,144 steps	524,288 steps
	Data memory						
		I/O memory (SX bus)		512 words			
		I/O memory (E-SX bus)		4,096 words			
		Non-retain memory	*1	1,310,720 words		2,621,440 words	5,242,880 words
		Retain memory	*1	573,440 words		638,976 words	1,048,576 words
		User FB memory	*2	212,992×2 words		294,912×2 words	376,832×2 words
		System FB memory	*2	147,456×2 words			
			Edge detection	10,240×2 points			
			Counter	6,144×2 points			
			Integrating timer	1,024×2 points			
			Timer	6,144×2 points			
			Others	45,056×2 words			
		System memory					
			SX bus	512 words			
			APL0/1	1,024 words			
			EtherCAT	512 words			

*1 This indicates the total value including user FB memory(non-retain memory, retain memory)and system FB memory (non-retain memory, retain memory).
*2 This indicates the default values in the Expert loader for the user FB memory and system FB memory.
*3 Only for Japan's doemestic market

SPH5000EC, SPH3000D Motion System

■ **Features**

■ The EtherCAT and SX bus realize wiring-saving motion systems.

● SPH5000EC: Large-scale (high-speed, high-accuracy) motion system

- 32-axis control / 1 ms (single-CPU system: 1 CPU)
- 96-axis control / 1 ms (multi-CPU system: 3 CPUs)
- SX bus, EtherCAT compatible
- Max. number of connected axes: 64 (EtherCAT 1-system)
- Maximum number of slaves: 238

● SPH3000D: Small- and medium-scale (economical) motion system

- 32-axis control / 2 ms
- SX bus compatible
- Max. number of connected axes: 32

■ Makes it possible to build scalable motion systems according to system scale and application

■ Comes with 10 built-in motion-specific FBs, making it ideal for motion control applications.

■ Makes it possible to build highly functional, high-performance motion systems with minimal configuration.
Achieves sequence control and motion control on a single CPU

Two in One

Sequence control and motion control are realized with only one CPU.

- Expensive special motion modules are unnecessary. You can save money to a large extent.
- Supporting both sequence and motion control by one programming tool (SX-Programmer Expert (D300win)) substantially improves the work efficiency.

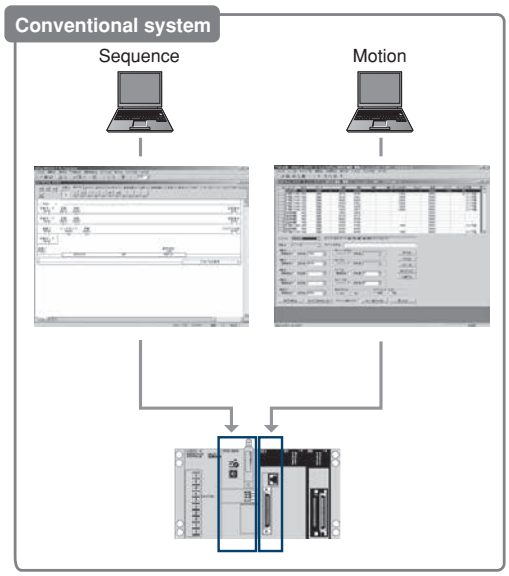

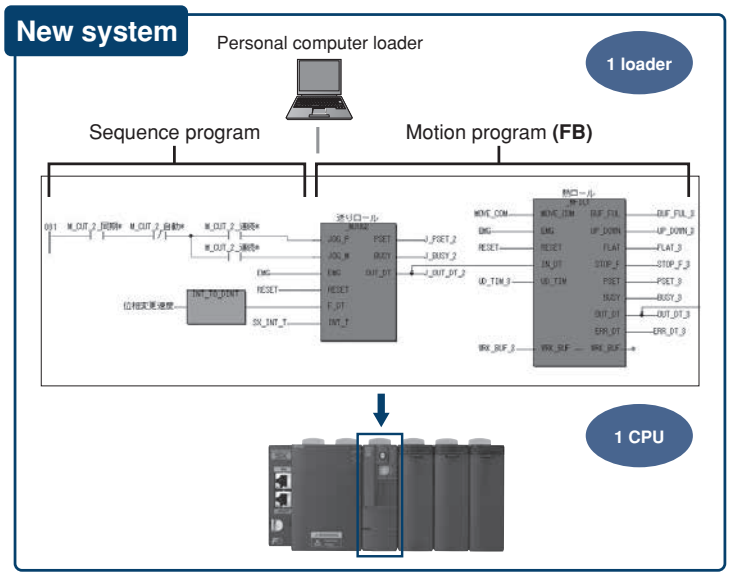

Smart

Various motion programs (FBs) are provided.

- Various function software programs (FBs) are provided.
- You can combine FBs to realize motion programs for large systems in a short time.
- You can freely set functions necessary for your machine for each axis. There are no limits on how to combine motion functions (such as positioning, interpolation, and synchronous operation).
- You can reuse the FB, so that the program development efficiency, debugging efficiency and reliability are substantially improved.

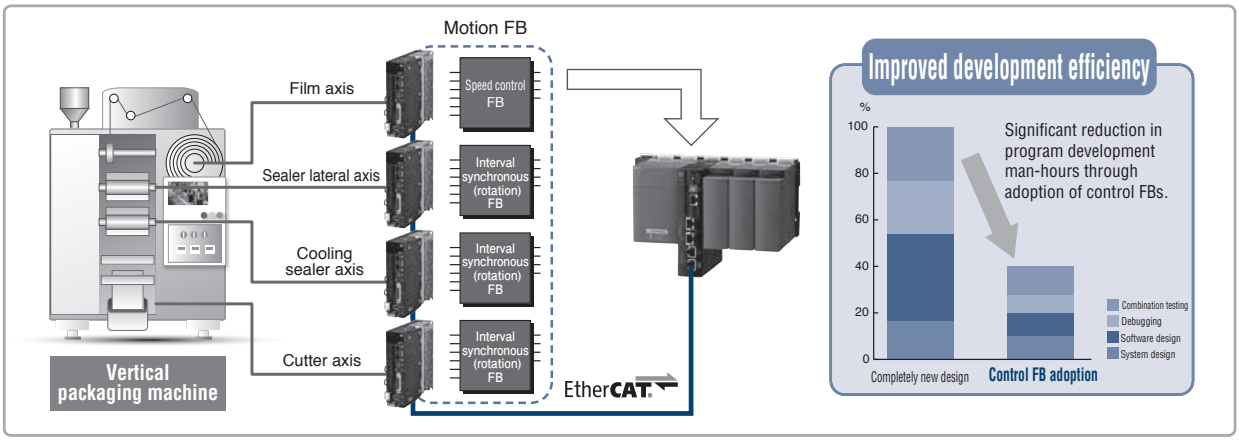

SPH5000H Highly reliable duplex system

■Features

High Reliability

- Redundant CPU
  High-performance operation utilizing
  1 Gbps equalization bus.
  High-reliability by ECC memory.
- Duplexd network
  High-speed communication utilizing
  1 Gbps FL-Net protocol.
  High performance communication by integrated
  network function in CPU module.
- Duplexd I/O network with loop function
  High-speed I/O refresh by E-SX bus.
  Robust I/O network utilizing loop support.

Developability and Applicabillty

- Large-scale I/O
  E-SX bus with up to 65,536 points.
- E-SX bus
  Ideal for high-speed processing, distributed
  deployment, high-speed synchronous systems.
  Enables mounting of processor link and I/O master
  on a baseboard with duplex E-SX bus interface module.

Highly maintainability

- Battery-less datarenentention with retain memory, RAS.

■System configuration example

MICREX-SX SPH5000H Configuration

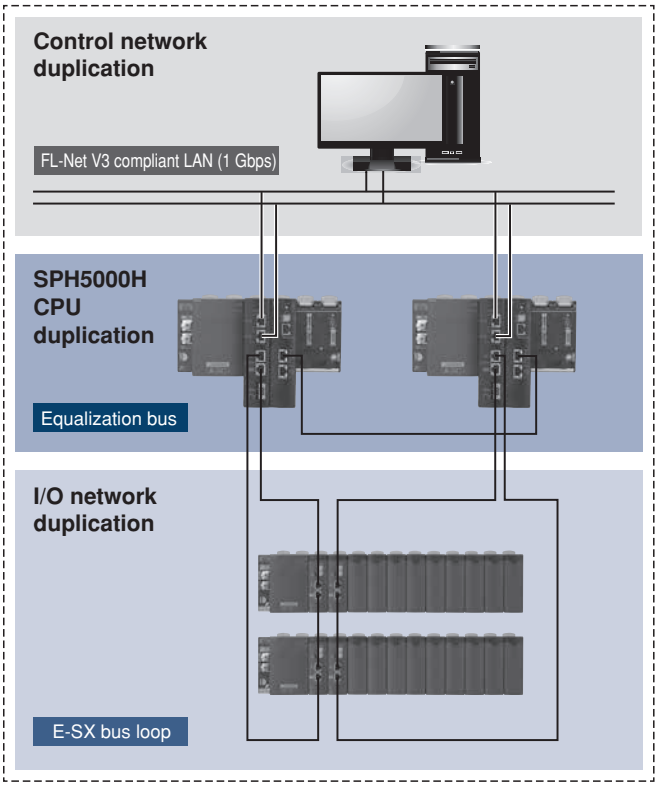

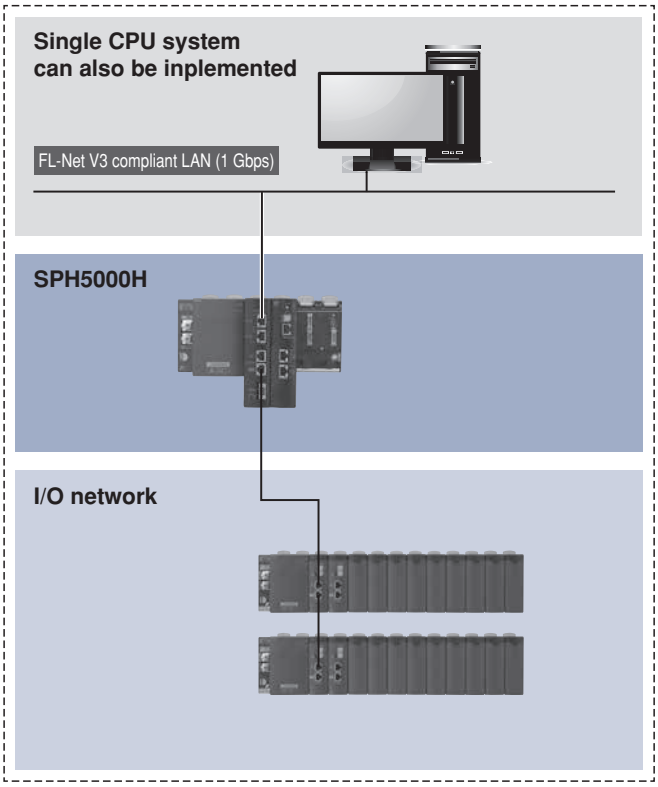

■Deployment Example

Suitable for systems that require 24/7 operation with no stoppages.

Water treatment system

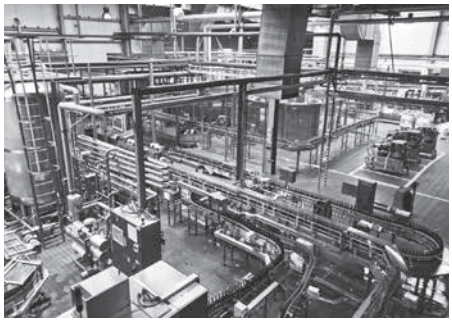

Foodplant

Clean room

SPH2000 redundant system

Relevant model: NP1PM-256H

■Features

- Mass equalization data
  Up to 320 Kwords of data can be equalized.
- High-speed transmission through dedicated equalization bus
  100 Mbps dedicated equalization bus transmits the equalization data. Also, as a connection cable, a commercially available LAN cable (shielded category 5, cross connect cable) is used.
- Module exchangeable during running CPU
  A failed CPU module can be exchanged without stopping the system by using a hot pluggable base board.
- Redundant multi-CPU system enabled
  Up to 4 multi-CPUs can be used for redundancy in multi-CPU (distributed processing) systems.
- Easy equalization setting
  Equalization area can be set up on a per-FB instance basis in addition to on a per-variable basis.
- System configuration with standard modules enabled
  Standard modules allow you to construct systems such as power supplies, base boards and I/O modules.

■System configuration example

Comparing SPH redundancy performance

	SPH2000 **NP1PM-256H**	SPH300 **NP1PS-□□**
Max. equalization capacity	320 Kwords	8 Kwords
Equalization performance	20 ms/8 Kwords 250 ms/320 Kwords	200 ms/8 Kwords
Equalization bus	Ethernet (for only) 100 Mbps	SX bus
Equalization timing	Setting task (multiple)	Default

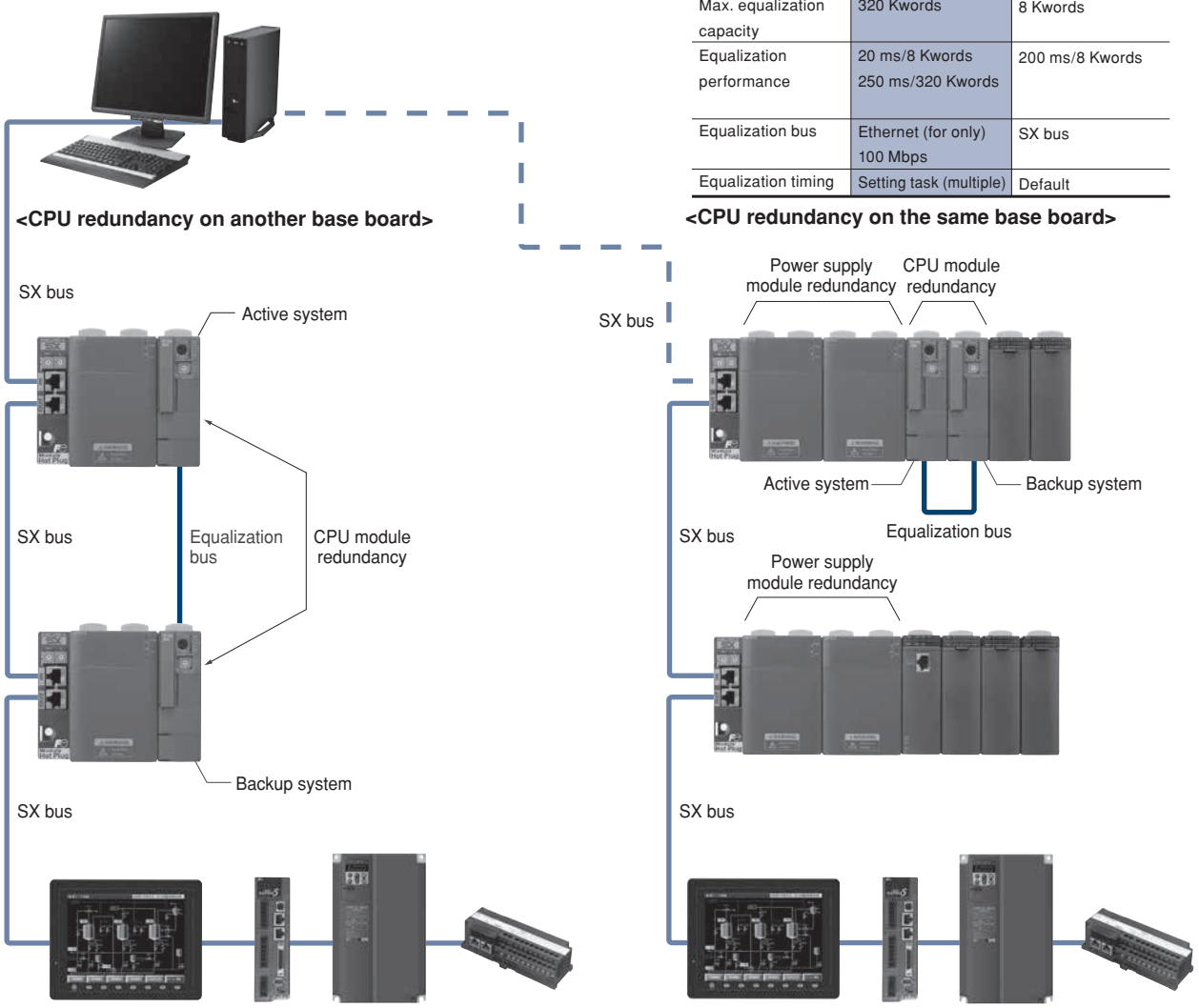

<Operation overview>

- CPU module redundancy
  SPH2000 supports “1:1 redundancy” which allows you to equalize the data and continue operation without stopping the system.
  Data equalization rate is up to 320 Kwords/250 ms (equalization bus transmission rate: 100 Mbps) using dedicated "equalization bus."
- Power supply module redundancy
  When two power supply modules are mounted on the same base board, the power supply modules run in parallel, and each module supplies 50% of the electric power.
  When an error occurs in one of the power supply modules, the normally running power supply module supplies 100% of the electric power.

SX-Net system of SPH3000MG

SX-Net is a controller level network based on gigabit Ethernet. It allows high-speed large-capacity communications.

■Features

- Large scale
  The network enables 126 nodes to be connected per system.
- Large capacity
  The network allows 128 Kwords (2,048 blocks in total in the unit of 64 words) as common memory space per system.
- High speed
  The settable shortest network scan interval is 0.5 ms (0.5 ms steps, up to 30 ms).

■SX-Net specifications

Item		Specifications
No. of connectable modules		126 units
Station number setting range		1 to 126
Scan interval		0.5 ms to 30 ms (0.5 ms steps) (This depends on the number of connected modules, distance, total data quantity, and the number of hubs.)
Common memory function	1-slot transmission size	512 W
	1-slot transmission time	30 us
	Maximum number of slots	256 slots
	Data area size	128 KW (64 * 2048 blocks)
	Area definition	64 W fixed-block selection method
	Unit of data guarantee	Unit of station occupation
	Area update timing	At the time of each scan (Batch transfer of area data)
Message function	Type	Unicast message (1 to 1)
		Broadcast message (1 to N)
	Size	1024 bytes

■System configuration example

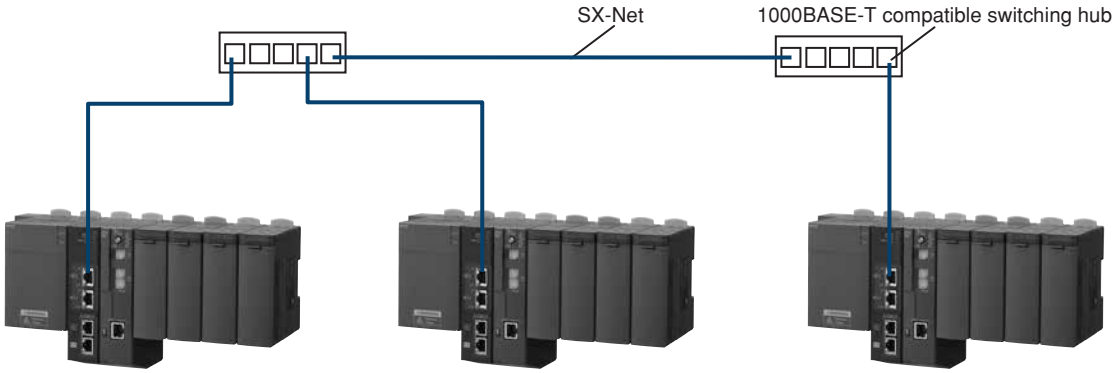

BACnet Monitoring System*

■Features

- The BACnet communication protocol complies with ANSI/ASHRAE Standard 135-2012.
- It runs as a BACnet MS/TP master. Device profiles support B-ASC functionality.

■BACnet MS/TP communication protocol

Item		Description
Port		Serial port 1 (general-purpose communication mode)
Standard		EIA-485 (RS-485)
Transmission speed		9600bps, 19200bps, 38400bps (default), 76800bps, 115200bps
Transmission distance		1,200 m (Transmission speed: 76,800 bps or less) 1,000 m (Transmission speed: 115,200 bps) Note: Please use ANSI/ASHRE recommended cables.
Communication method		3-wire half-duplex system
Synchronization method		Start-stop synchronous transmission
Protocol		BACnet MS/TP master
Number of connectible modules		Max. of 32 units per segment (80 units when using a repeater)
Terminating resistor		120 Ω
Address		0 to 127 (MS/TP master)
Cable specifications		Shielded twisted pair cable AWG 12 to 24 [ANSI/ASHRE recommendation] AWG 18 or thicker cables Capacitance between cables : 100 pF/m or less Capacitance between cable and shield: 200 pF/m or less
Transmission format	Data length	8 bits
	Parity	Non parity
	Stop bits	1 bit
Insulation method		Photocoupler insulation

* The following BACnet objects are supported.
The maximum number of objects that can be registered is 300.

Object name	Object Type	Description
Analog Input	0	Analog input
Analog Output	1	Analog output
Analog Value	2	Analog input/output
Binary Input	3	Binary input
Binary Output	4	Binary output
Binary Value	5	Binary input/output
Device	8	Device information
Multi-state Input	13	Multi-state input
Multi-state Output	14	Multi-state output
Multi-state Value	19	Multi-state I/O
Nortification Class	15	Event notification recipient management
Accumulator	23	Integrated value

* The property data of each object will be retained even during a power failure.
* It is compatible with the SX-Programmer Expert (D300win) programming support tool.
* The dedicated Excel file and BACnet configuration tool makes it easy to configure settings.
(The Excel file and configuration tool can be downloaded for free from our website.)

■System configuration

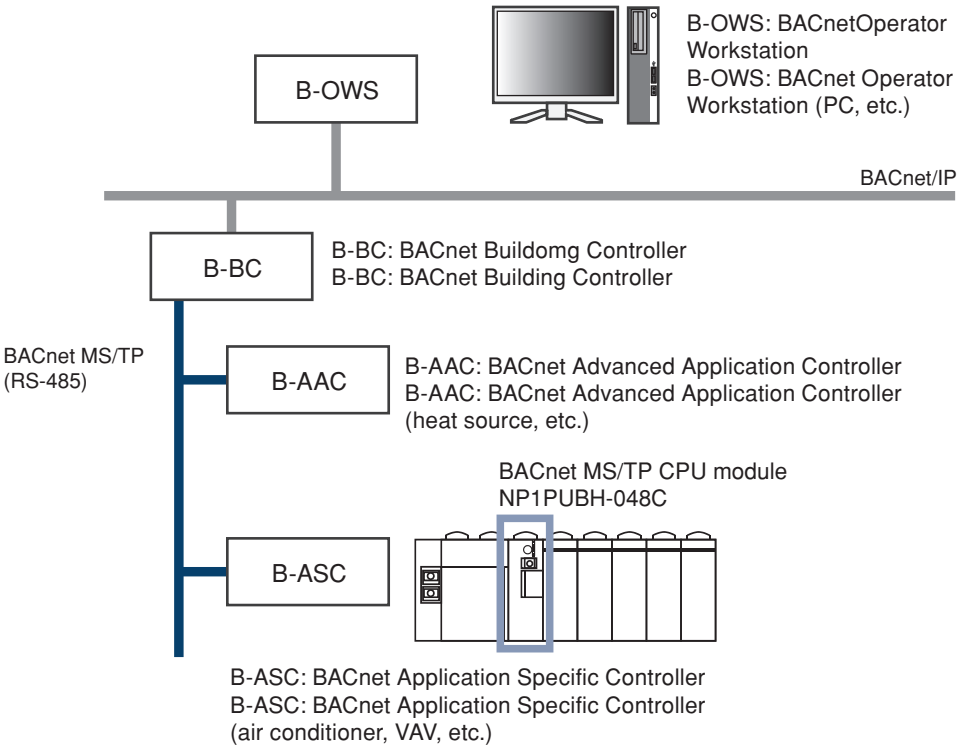

*This product is for Japan's doemestic market.

Simple Ultra high-speed serial bus system (EtherCAT: 100Mbps, SX bus: 25Mbps) is adopted.

Minimum command communication cycle for EtherCAT: 0.5 ms; SX bus: 1 ms

- The servo amplifier directly connected to the EtherCAT and SX bus helps establish a wiring-saving system. Cumbersome I/O wiring work and faults caused by wiring are substantially reduced.
- You can operate the servo using the servo loader from the PC connected to the CPU module. (Not necessary to change PC connections)
- Addition of a servo axis to the system is quick with the Ethernet cable and SX bus cable. (Modular connector)
- You can perform high level data control (operation status monitoring and fault status monitoring) from the loader.

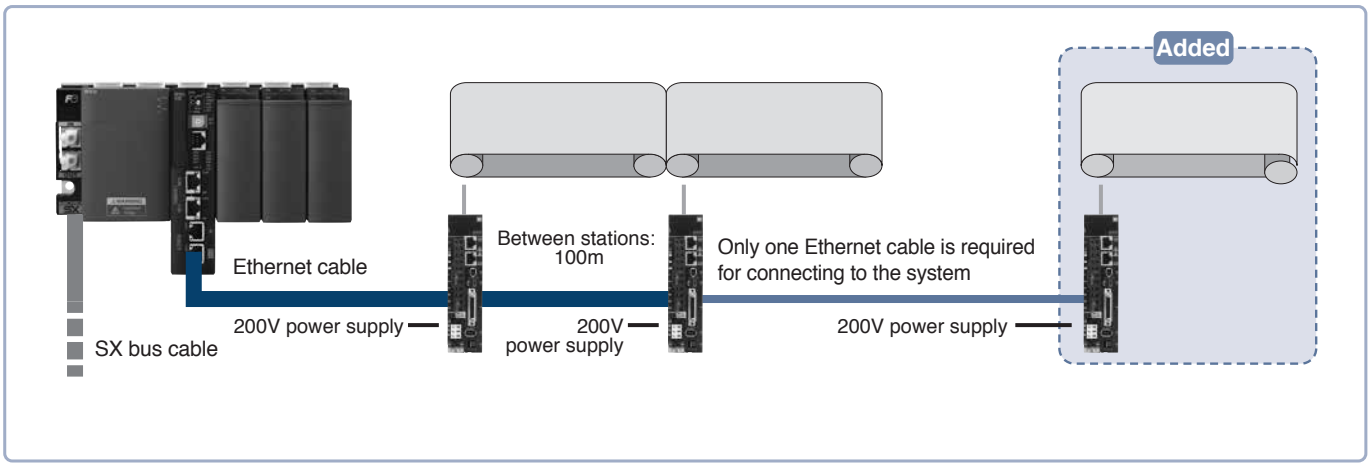

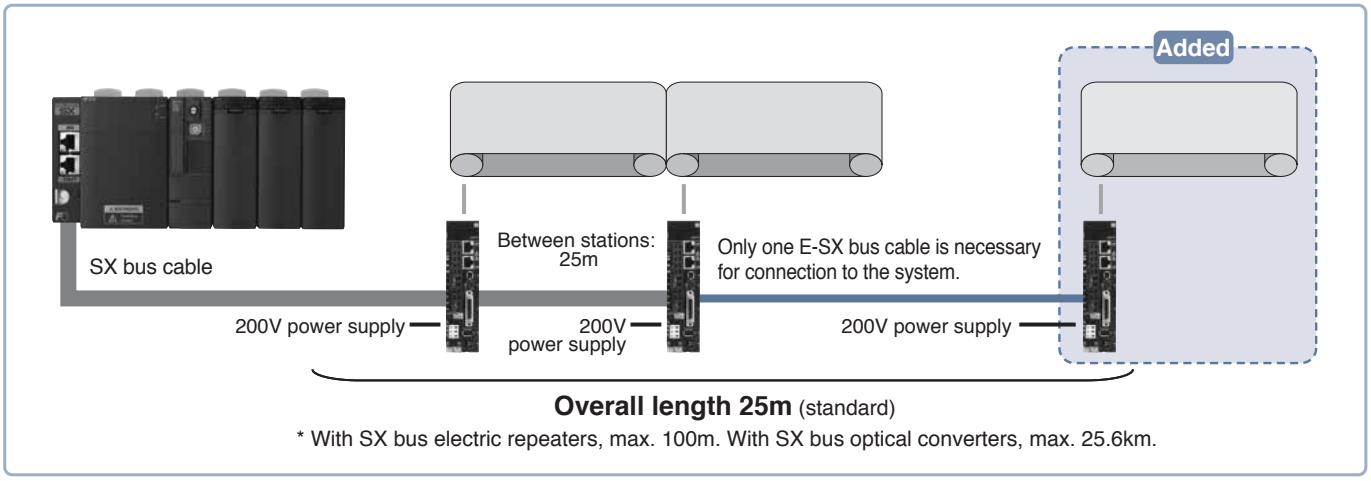

Appearance

• SPH200 (NP1PH-08/NP1PH-16)

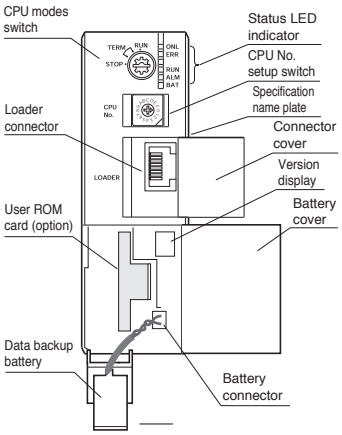

• SPH300 (NP1PS-32R/NP1PS-74R/NP1PS-117R/NP1PS-245R)

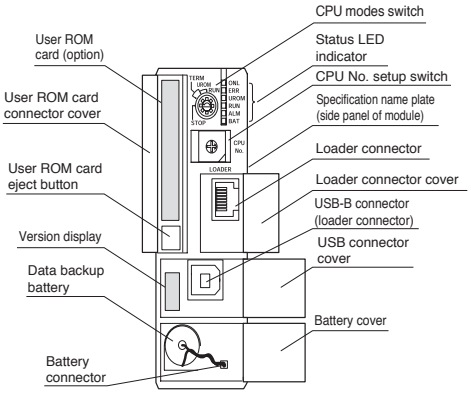

• SPH300EX (NP1PS-74D)

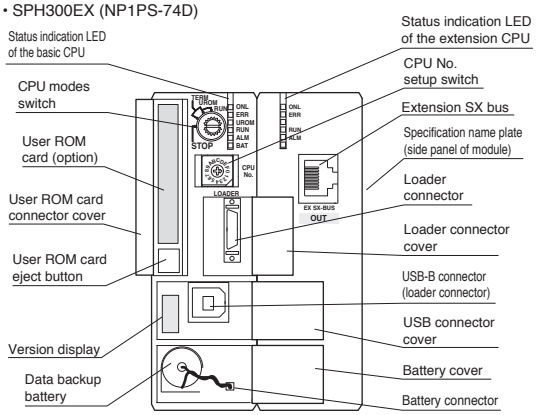

• SPH2000 (NP1PM-48R/NP1PM-48E/NP1PM-256E/NP1PM-256H)

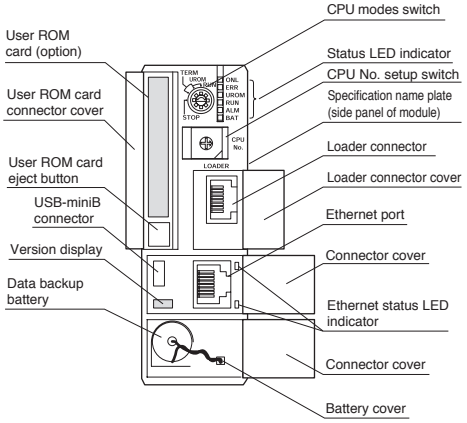

• SPH3000 (NP1PU-048E/NP1PU-128E/NP1PU-256E)

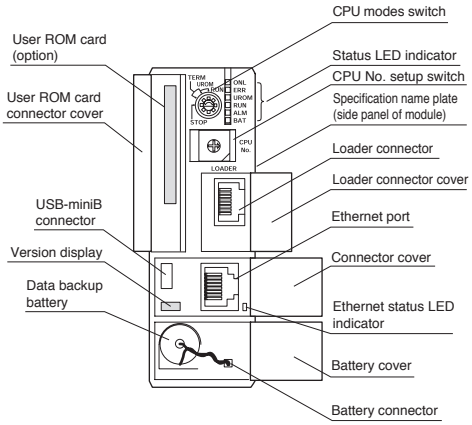

• SPH3000MM (NP1PU2-048E/NP1PU2-256E)

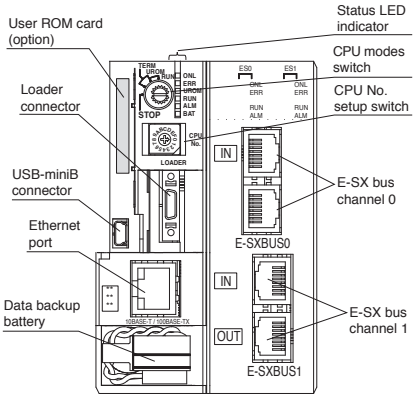

• SPH3000MG (NP1PU1-256NE)

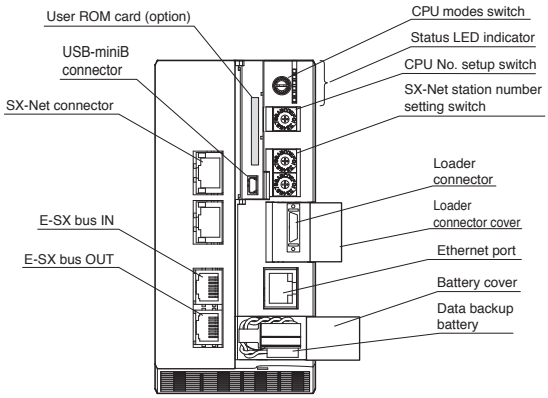

• SPH5000H (NP1PU1-512H)

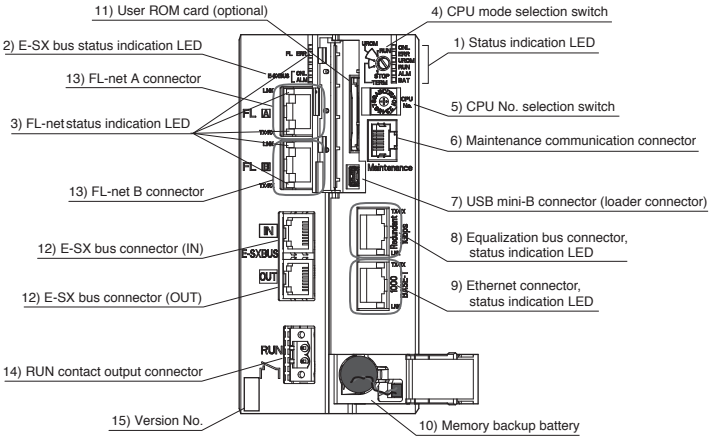

• BACnet MS/TP(NP1PUBM-048C)*

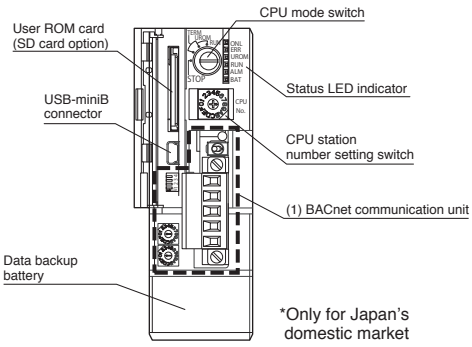

*Only for Japan's domestic market

• SPH5000M(NP1PA1-096E/NP1PA1-128E/NP1PA1-256E/NP1PA1-512E)

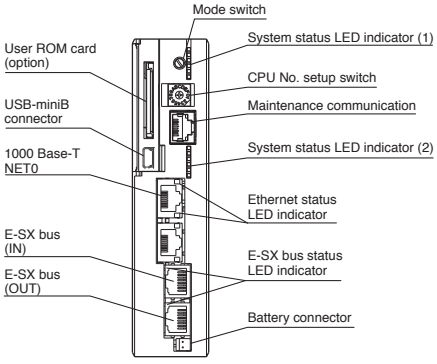

• SPH5000EC(NP1PA1C-096E/NP1PA1C-128E/NP1PA1C-256E/NP1PA1C-512E)

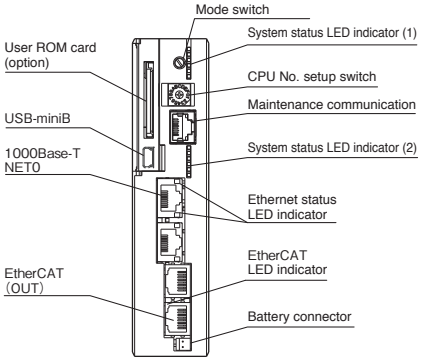

Base Board: NP1B□-□□

Name		Model	Max. no. of modules	Internal current consumption	Weight	Remarks
Standard base board	Base board 3 slots	**NP1BS-03**	2 (Not include a power supply)	35 mA or less	Approx. 250 g	SX bus 3 slots, processor bus 2 slots
	Base board 6 slots	**NP1BS-06**	5 (Not include a power supply)	45 mA or less	Approx. 420 g	SX bus 6 slots, processor bus 4 slots
	Base board 8 slots	**NP1BS-08**	6 (Not include a power supply)	50 mA or less	Approx. 540 g	SX bus 8 slots, processor bus 3 slots
	Base board 11 slots	**NP1BS-11**	9 (Not include a power supply)	60 mA or less	Approx. 720 g	SX bus 11 slots, processor bus 3 slots
	Base board 13 slots	**NP1BS-13**	11 (Not include a power supply)	70 mA or less	Approx. 840 g	SX bus 13 slots, processor bus 3 slots
High-performance base board	Base board 13 slots	**NP1BP-13**	11 (Not include a power supply)	70 mA or less	Approx. 840 g	SX bus 13 slots, processor bus 10 slots
Standard base board with station number setting switch	Base board 8 slots	**NP1BS-08S**	6 (Not include a power supply)	60 mA or less	Approx. 550 g	SX bus 8 slots, processor bus 3 slots
	Base board 11 slots	**NP1BS-11S**	9 (Not include a power supply)	70 mA or less	Approx. 730 g	SX bus 11 slots, processor bus 3 slots
	Base board 13 slots	**NP1BS-13S**	11 (Not include a power supply)	80 mA or less	Approx. 850 g	SX bus 13 slots, processor bus 3 slots
High-performance base board with station number setting switch	Base board 13 slots	**NP1BP-13S**	11 (Not include a power supply)	80 mA or less	Approx. 850 g	SX bus 13 slots, processor bus 10 slots
Standard hot plug base board with station number setting switch	Base board 8 slots	**NP1BS-08D**	6 (Not include a power supply)	70 mA or less	Approx. 550 g	SX bus 8 slots, processor bus 3 slots
	Base board 11 slots	**NP1BS-11D**	9 (Not include a power supply)	80 mA or less	Approx. 730 g	SX bus 11 slots, processor bus 3 slots
	Base board 13 slots	**NP1BS-13D**	11 (Not include a power supply)	80 mA or less	Approx. 850 g	SX bus 13 slots, processor bus 3 slots
Station number setting switch incorporated high-performance hot plug base board	Base board 13 slots	**NP1BP-13D**	11 (Not include a power supply)	80 mA or less	Approx. 850 g	SX bus 13 slots, processor bus 10 slots
EP bus-compatible base (EP bus 3 slots)	Base board 6 slots	**NP1BE-06**	4 (Not include a power supply)	31 mA or less	Approx. 490 g	SX bus 6 slots, processor bus 3 slots
	Base board 8 slots	**NP1BE-08**	6 (Not include a power supply)	31 mA or less	Approx. 630 g	SX bus 8 slots, processor bus 3 slots
	Base board 11 slots	**NP1BE-11**	9 (Not include a power supply)	31 mA or less	Approx. 850 g	SX bus 11 slots, processor bus 3 slots
	Base board 13 slots	**NP1BE-13**	11 (Not include a power supply)	31 mA or less	Approx. 980 g	SX bus 13 slots, processor bus 3 slots
	Base board 13 slots	**NP1BX-13**	11 (Not include a power supply)	31 mA or less	Approx. 980 g	SX bus 13 slots, processor bus 10 slots

Note: It allows operators to build a single-CPU or multi-CPU SPH5000M configuration by mounting one to three SPH5000Ms to an EP (enhanced processor) bus-compatible baseboard.Furthermore, it ensures compatibility with standard, high-performance baseboards (models: NP1BS-□□ /NP1BP-□□□).
Mount a power supply module, plus not less than one module, onto the base board.
Make sure to always mount the power supply module at the left side of the base board.
A high-performance base board is used when configuring the system, such as one with multi-CPUs and redundancy, and it uses a processor bus heavily.
Modules which use the processor bus are as follows:
· CPU module · FL-net module
· P-link/PE-link module · LE-net related module
Single-slot power supplies (model: NP1S-91/NP1S-81) cannot be used with EP bus-compatible baseboards.

■Dimension

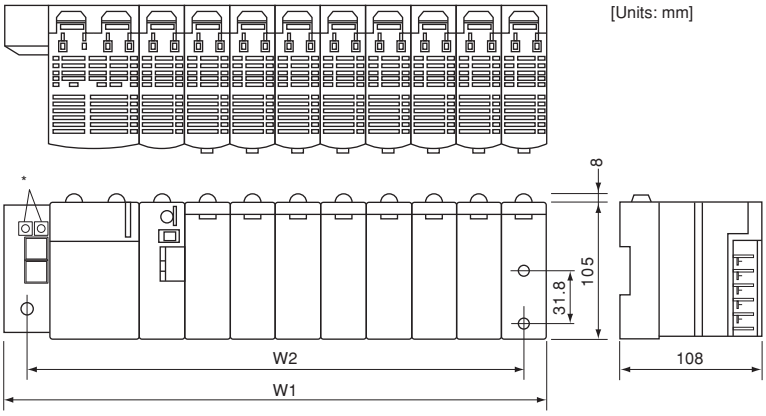

No. of slots	W1	W2
3	133 mm	115 mm
6	238 mm	220 mm
8	308 mm	290 mm
11	413 mm	395 mm
13	483 mm	465 mm

Note: When the connector is mounted, the depth is a max. of 195.3mm.
The bracket is already mounted on the base board.

* Station number setting switch
Incorporated in base board with the station number setting switch

E-SX bus Product


Digital input unit


Analog input unit


High-speed counter


Integrated type interface module


Auxiliary power supply unit

■Digital input/output unit

It is a separate mounting type I/O unit that can be directly connected to the E-SX bus.

- Digital input unit

Item	Specifications
Model	**NU2X3206-W**
Input method	Sink/source in common use 32-point (8-point common x 4 circuits)
Input voltage	Rating: 24 V DC, max. acceptable: 30 V DC, Acceptable ripple rate: 5% or less
Power supply method	E-SX bus cable (24 V DC)
Rated current	7 mA (at 24 V DC)
Standard operation range	OFF→ON: 15-30 V ON→OFF: 0-5 V
Input delay time	OFF to ON: 25 μs or less (hard filter time) + (soft filter time) ON to OFF: 75 μs or less (hard filter time) + (soft filter time)
Insulation method	Photocoupler insulation
External connections	Detachable M3 screw terminal block
Internal current consumption	Operating: 260 mA or less, Bypassing: 93 mA
Dimension (W×H×D) [mm]	240 x 65 x 60 (except DIN rail mounting protrusions)
Weight	Approx. 430 g

- Digital output unit

Item	Specifications
Model	**NU2Y32T09P6**
Output method	Transistor sink 32 points (8-point common x 4 circuits)
Output voltage	Rating: 24 V DC, Allowable: 10.8 V to 30 V DC
Power supply method	E-SX bus cable (24 V DC)
Max. load current	0.6 A/ point 4 A/ common
Output delay time	OFF to ON: 10 μs or less ON to OFF: 200 μs or less
Output protection	Overload protection: built-in fuse (common unit 4 fuses) Surge suppression: Varistor (total 32 points)
Insulation method	Photocoupler insulation
External connections	Detachable M3 screw terminal block
Internal current consumption	Operating: 300 mA or less, Bypassing: 93 mA
Dimension (W×H×D) [mm]	240 x 65 x 60 (except DIN rail mounting protrusions)
Weight	Approx. 410 g

- Example external connection of digital input

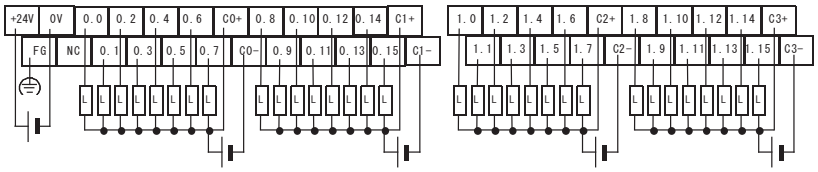

- Internal circuit diagram of digital input

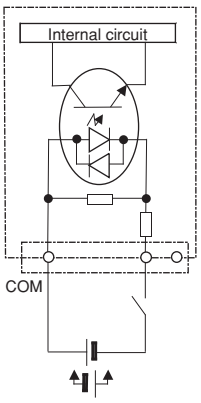

- Example external connection of digital output

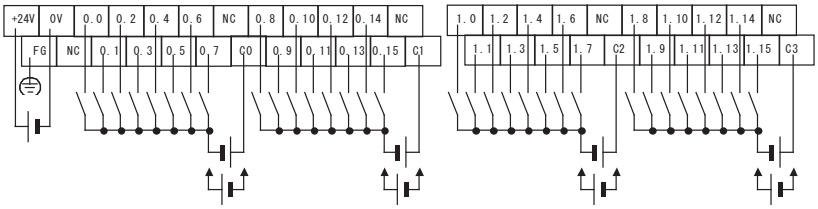

- Internal circuit diagram of digital output

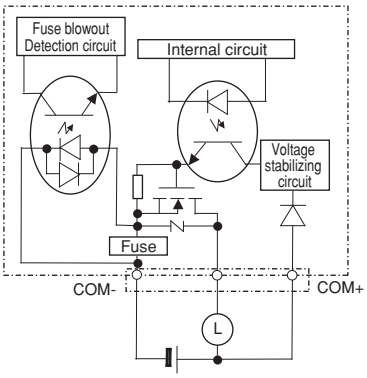

- Outline dimensional drawing
  (digital I/O unit, high-speed counter unit)

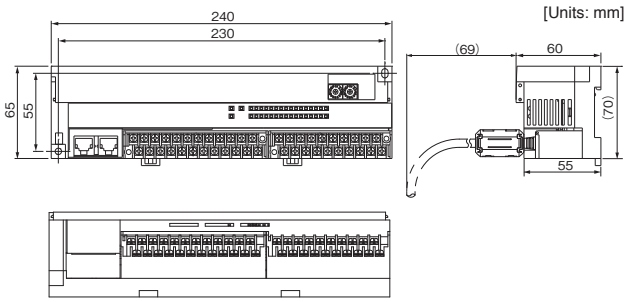

■Analog input/output unit

It is a separate mounting type analog unit that can be directly connected to the E-SX bus.

- Analog input unit

Item	Specifications			
Model	**NU2AXH2-MR**			
Input format	Multi-range 2 channels			
Power supply method	E-SX bus cable (24 V DC)			
Signal range	0 to 10V 0 to 5V 1 to 5V	-5 to +5V -10 to +10V	-20 to +20mA	0 to 20mA 4 to 20mA
Digital converted value (INT type)	0 to 20000	-20000 to +20000		0 to 20000
Resolution	15 bits			
Measurement accuracy	±0.1% of F.S.R. (Ta = 23˚C ±5˚C), setting moving average for 8 data or more			
Converting speed	25 µs/2 channels			
Insulation method	Between analog input terminal and FG: Photocoupler and transformer insulated Between analog input terminal and channel: Transformer insulated			
External connections	Detachable M3 screw terminal block			
Internal current consumption	Operating: 300 mA or less, Bypassing: 93 mA			
Dimension (W×H×D) [mm]	165 x 65 x 60 (except DIN rail mounting protrusions)			
Weight	Approx. 360 g			

- Analog output unit

Item	Specifications				
Model	**NU2AYH2V-MR**				
Output format	Voltage multi-range 2 channels				
Power supply method	E-SX bus cable (24 V DC)				
Signal range	-10 to +10 V	-5 to +5 V	0 to 10 V	0 to 5 V	1 to 5 V
Digital converted value (INT type)	-20000 to +20000		0 to 20000		
Max. resolution	0.5 mV	0.25 mV	0.5 mV	0.25mV	0.2mV
Measurement accuracy	±0.1% of F.S.R. (Ta = 23°C±5°C)				
Converting speed	25 µs/2 channels				
Insulation method	Between analog output terminal and FG: Photocoupler and transformer insulated Between analog output terminal and channel: Transformer insulated				
External connections	Detachable M3 screw terminal block				
Internal current consumption	Operating: 300 mA or less, Bypassing: 93 mA				
Dimension (W×H×D) [mm]	165 x 65 x 60 (except DIN rail mounting protrusions)				
Weight	Approx. 350 g				

- Internal circuit diagram of analog input

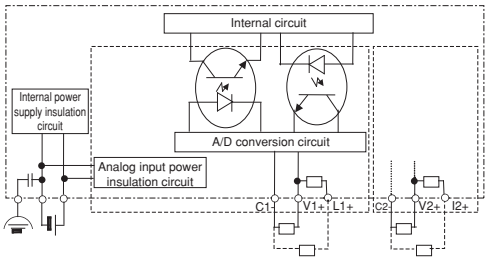

- Internal circuit diagram of analog output

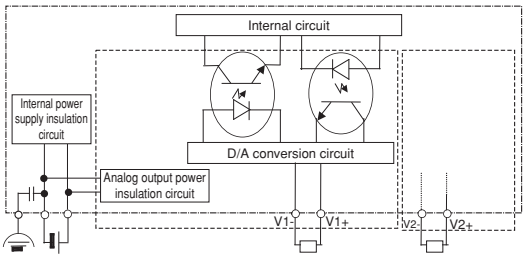

- Example external connection of analog input

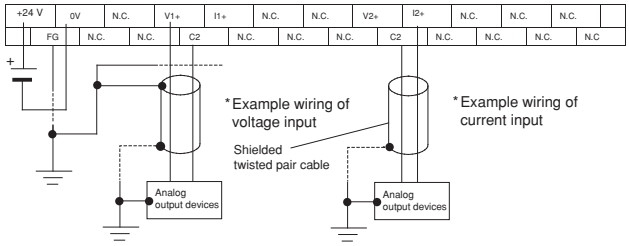

- Example external connection of analog input

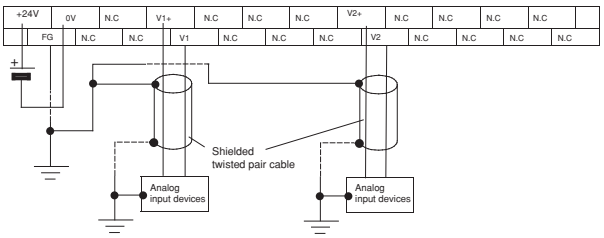

- Analog input unit characteristic diagram

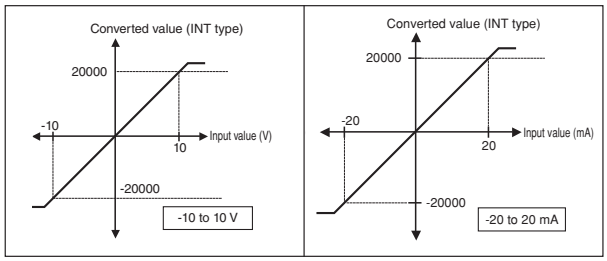

- Analog output unit characteristic diagram

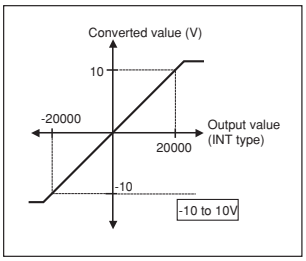

- Outline dimensional drawing (analog I/O units)

[Units: mm]

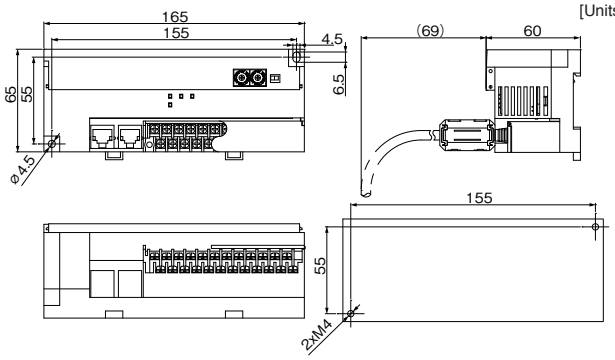

■High-speed counter unit

It is a separate mounting type high-speed counter that can be directly connected to the E-SX bus.

Item	Specifications			
Model	**NU2F-HC2**			
Input format	90-degree phase difference, 2-phase signal, 2-channel			
Power supply method	E-SX bus cable (24 V DC)			
Signal type	Differential input	Open collector	Open collector	Open collector
Rated voltage	5 V DC	5 V DC	12 V DC	24 V DC
Response frequency	1MHz	250KHz		
Max. input frequency	4 Mbps	1 Mbps		
Counting range	Signed 32-bit binary (-2147483648 to +2147483647)			
Counting operation mode	Linear/ring operation, gate operation, preset operation latch operation, Z phase detection operation			
Insulation method	Photocoupler insulation			
External connections	Detachable M3 screw terminal block			
Internal current consumption	Operating: 250 mA or less, Bypassing: 93mA or less			
Dimension (W×H×D) [mm]	240 x 65 x 60 (except DIN rail mounting protrusions)			
Weight	Approx. 500 g			

- Differential input section wiring

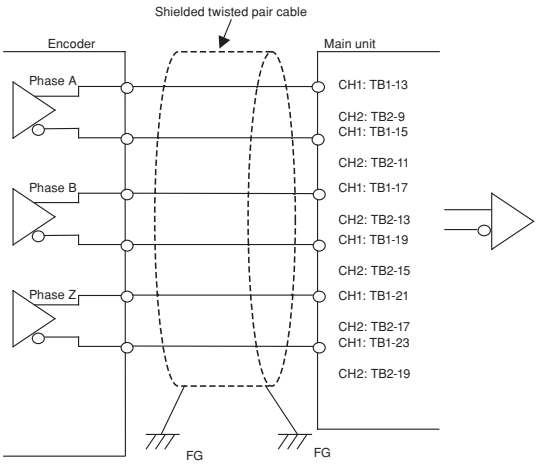

■Integrated type interface module

It can be mounted on the conventional SPH base board so that the SX bus connection device which is controlled by this module can be used as a module on the E-SX bus.

Item	Specifications	
Model	**NP1L-RU1**	**NP1L-RU1H**
Application	Connects modules connected to SX bus to E-SX bus	Connects modules connected to SX bus to E-SX bus, and makes E-SX bus lines redundant
Connected CPU	SPH3000MG series, SPH3000MM series	SPH5000H series
Number of connectible modules	Max. 8 modules/E-SX bus system	Max. 32 modules/configuration
Number of I/Os	4096 words	4096 words
E-SX bus connection configuration	Bus connection	Bus connection, loop connection
Base plate	Standard base NP1B□-□□ Base with station number setting function NP1B□-□□ S * Use of base with live wire removal function not possible.	Base with station number setting function NP1B□-□□ S Base with live wire removal function NP1B□-□□ D * Standard base not available
USB port	For program support tool connection	
Internal current consumption	24V DC 140mA or less	24V DC 140mA or less
Weight	Approx. 220 g	Approx. 220 g

- Open collector input section wiring

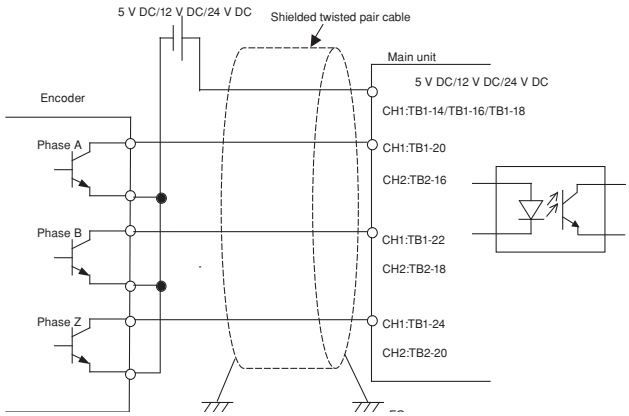

■Auxiliary power supply unit

It is a separate mounting auxiliary unit to supply 24 V DC to the E-SX bus cable and to connect 5 or more units which are compatible with the E-SX bus to the E-SX bus connector of the CPU module.

Item	Specifications
Model	**NU2V-PA1**
No. of connectable modules	Max. of 10 units on the E-SX bus (Max. of 8 m between main units) This one unit for 5 E-SX bus devices as a guide
Rated input voltage	24 V DC (external power supply is used)*1
Voltage tolerance	22.8 V DC to 27 V DC
Overcurrent detection	When an overcurrent is detected, the 24 V DC supply is stopped. To restart the power supply, press the reset switch.
Internal current consumption	No load: 70 mA or less, 10 units connected: 1 A or less
Dimensions (W x H x D) in mm	50 × 95 × 95
Weight	Approx. 150 g

*1 Use a switching power supply (UL-specified product) of 24 V DC and 1.1 A for an external power supply.

- Outline drawing of auxiliary power unit

[Units: mm]

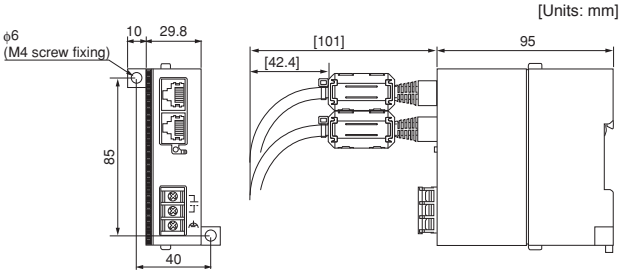

Digital Input Module: NP1X□

■Performance specifications

Model	Input format	No. of input points	Rated voltage	Rated current	Standard operation range OFF→ON	Standard operation range OFF→ON	Input delay time OFF→ON	Input delay time OFF→ON	Insulation method	Status indication	No. of points/ common	External connections	Internal current consumption (24 V DC)	Weight
NP1X0805 *	DC input, sink/source	8 points	110 V DC	5 mA	80 to 140 V	0 to 22 V	1 to 1 ms, 3 to 3 ms		Photocoupler insulation ON to OFF	LED indication	8 points x 1	Terminal block	35 mA or less	Approx. 300 g
NP1X1606-W		16 points	24 V DC	7 mA	15 to 30 V	0 to 5 V	3 to 10 ms, 10 to 10 ms				8 points x 2		35 mA or less	Approx. 150 g
NP1X1607-W			48 V DC	5 mA	34 to 60 V	0 to 10 V	30 to 30 ms, 100 to 100 ms						35 mA or less	Approx. 150 g
NP1X3206-W		32 points	24 V DC	4 mA	15 to 30 V	0 to 5 V	Variable by parameter setting				32 points x 1	Connector	50 mA or less	Approx. 130 g
NP1X3202-W			5 to 12 V DC	3 to 9 mA	3.5 to 13.2 V	0 to 1 V							50 mA or less	Approx. 130 g
NP1X6406-W		64 points	24 V DC	4 mA	15 to 30 V	0 to 5 V					32 points x 2		85 mA or less	Approx. 180 g
NP1X0810	AC input	8 points	100 to 120 V AC	10 mA	80 to 132 V	0 to 20 V	Approx. 10 ms	Approx. 10 ms			8 points x 1	Terminal block	35 mA or less	Approx. 130 g
NP1X1610		16 points									16 points x 1		40 mA or less	Approx. 170 g
NP1X0811		8 points	200 to 240 V AC		160 to 264 V	0 to 40 V					8 points x 1		35 mA or less	Approx. 130 g
NP1X1610-RI		16 points	100 to 120 V AC	7 mA	80 to 132 V	0 to 20 V		Approx. 30 ms			16 points x 1		40 mA or less	Approx. 170 g
NP1X1611-RI			200 to 240 V AC		160 to 264 V	0 to 40 V								Approx. 180 g

* NP1X0805 occupies two slots of the base board.

■Internal circuit diagram

NP1X1606-W, NP1X1607-W

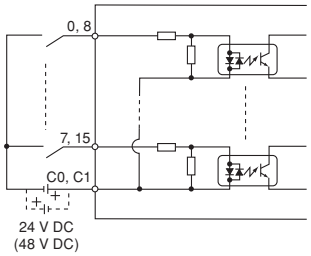

NP1X3206-W, NP1X3202-W

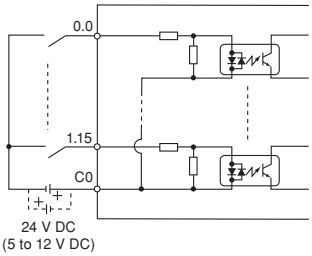

NP1X6406-W

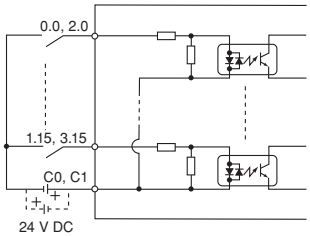

NP1X0810, NP1X0811

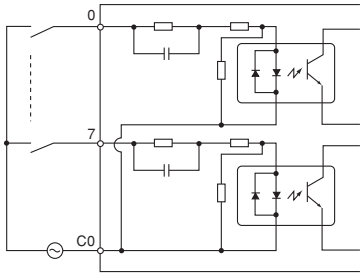

NP1X1610, NP1X1611-RI

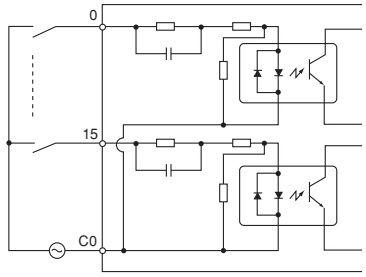

NP1X0805

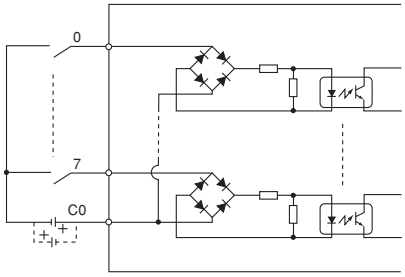

NP1X1610-RI

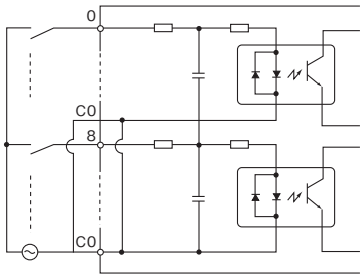

Digital Output Module: NP1Y□

■Performance specifications

Model	Output format	No. of output points	Rated voltage	Max. load current		Output delay time		Insulation method	Status indication	No. of points/ common	Surge protection	External connections	Internal current consumption (24 V DC)	Weight
				1 point	Common	OFF→ON	ON→OFF							
NP1Y08T0902	Transistor output sink type	8 points	12 to 24 V DC	2.4 A	8 A	1 ms or less	1 ms or less	Photocoupler insulation	LED indication	8 points x 1	Varistor	Terminal block	20 mA or less	Approx. 150 g
NP1Y16T09P6		16 points		0.6 A	4 A					8 points x 2			42 mA or less	Approx. 160 g
NP1Y16T10P2			48 V DC	0.2 A	1.6 A								42 mA or less	Approx. 160 g
NP1Y32T09P1		32 points	12 to 24 V DC	0.12A	3.2 A					32 points x 1	Zener diode	Connector	45 mA or less	Approx. 130 g
NP1Y64T09P1		64 points								32 points x 2			90 mA or less	Approx. 180 g
NP1Y08U0902	Transistor output source type	8 points		2.4 A	8 A					8 points x 1	Varistor	Terminal block	20 mA or less	Approx. 150 g
NP1Y16U09P6		16 points		0.6 A	4 A					8 points x 2			43 mA or less	Approx. 160 g
NP1Y32U09P1		32 points		0.12 A	3.2 A					32 points x 1	Diode	Connector	45 mA or less	Approx. 140 g
NP1Y64U09P1		64 points								32 points x 2			90 mA or less	Approx. 180 g
NP1Y08S	SSR output	8 points	100 to 240 V AC	2.2 A	2.2 A	10 ms or less	10 ms or less			All points are independent.	CR absorber and varistor	Terminal block	80 mA or less	Approx. 200 g
NP1Y08R-04	Relay output	8 points	110 V DC/ 240 V AC	30 V DC/ 264 V AC: 2.2 A 110 V DC: 0.2 A	30 V DC/ 264 V AC: 4 A 110 V DC: 0.8 A	Approx. 10 ms	Approx. 10 ms	Relay insulation		4 points x 2	Varistor		80 mA or less	Approx. 150 g
NP1Y16R-08		16 points			30 V DC/ 264 V AC: 8 A 110 V DC: 1.6 A					8 points x 2			176 mA or less	Approx. 190 g
NP1Y08R-00		8 points			—					All points are independent.			100 mA or less	Approx. 170 g

■Internal circuit diagram

NP1Y08T0902

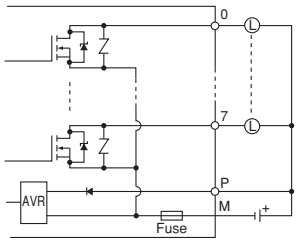

NP1Y16T09P6 , NP1Y16T10P2

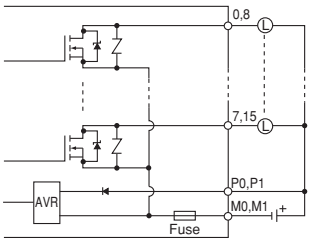

NP1Y32T09P1

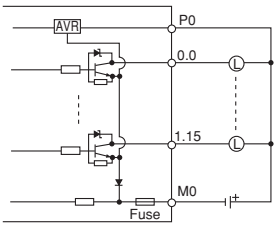

NP1Y64T09P1

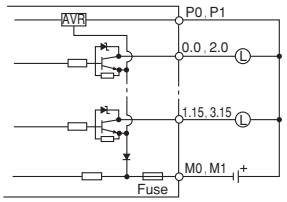

NP1Y08U0902

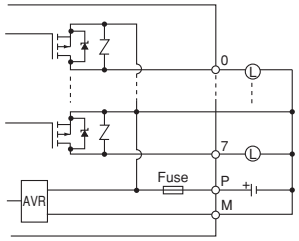

NP1Y16U09P6

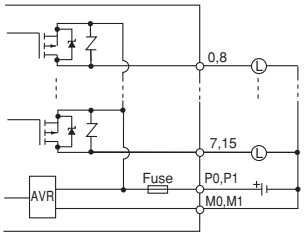

NP1Y32U09P1

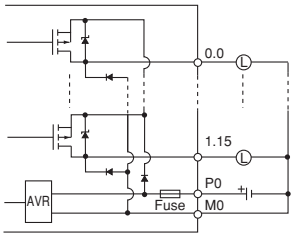

NP1Y64U09P1

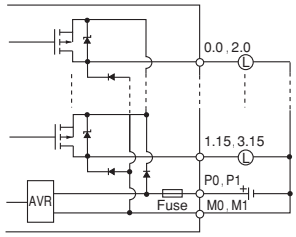

NP1Y08S

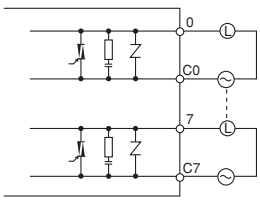

NP1Y08R-04

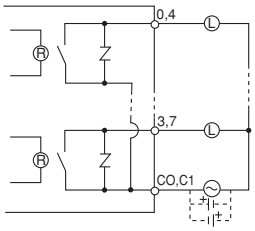

NP1Y16R-08

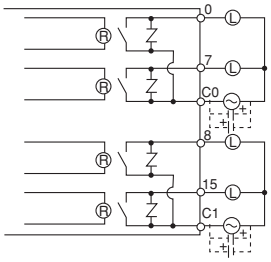

NP1Y08R-00

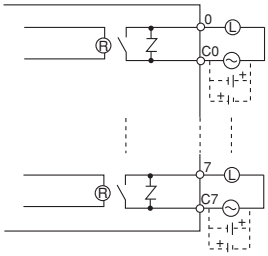

Digital I/O Module: NP1W□

■Performance specifications

Model	Input					Output						Common				
	Input format	No. of input points	Rated voltage	Rated current	No. of points/ common	Output format	No. of output points	Rated voltage	Max. load current 1 point	Max. load current Common	No. of points/ common	Insulation method	Status indication	External connections	Internal current consumption (24 V DC)	Weight
NP1W1606T	DC input, source	8 point	24 V DC	7 mA	8 points x 1	Transistor output sink	8 point	12 to 24 V DC	0.6 A/point	4 A/common	8 points x 1	Photocoupler insulation	LED indication	Terminal block	35 mA or less	Approx. 150 g
NP1W3206T		16 point		4 mA	16 points x 1		16 point		0.12 A/point	1.6 A/common	16 points x 1			Connector	50 mA or less	Approx. 140 g
NP1W1606U	DC input, sink	8 point		7 mA	8 points x 1	Transistor output source	8 point		0.6A/point	4 A/common	8 points x 1			Terminal block	35 mA or less	Approx. 150 g
NP1W3206U		16 point		4 mA	16 points		16 point		0.12 A/point	1.6 A/common	16 points x 1			Connector	50 mA or less	Approx. 140 g
NP1W6406T	DC bidirectional input	32 point		4 mA	32 points x 1	Transistor output sink	32 point		0.12 A/point	3.2 A/common	32 points x 1			Connector	90 mA or less	Approx. 180 g
NP1W6406U	DC bidirectional input	32 point		4 mA	32 points x 1	Transistor output source	32 point		0.12 A/point	3.2 A/common	32 points x 1			Connector	90 mA or less	Approx. 180 g

■Internal circuit diagram

NP1W1606T

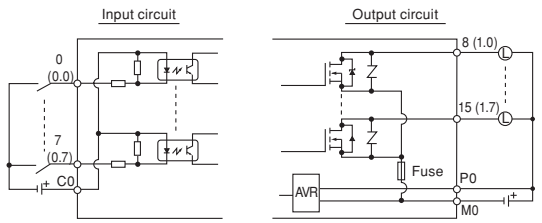

NP1W1606U

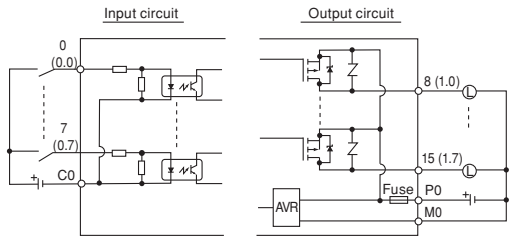

NP1W3206T

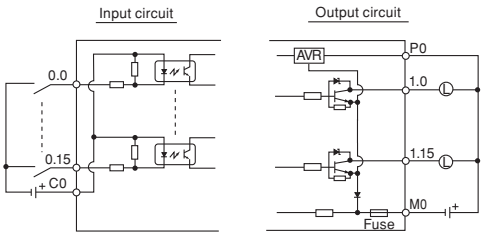

NP1W3206U

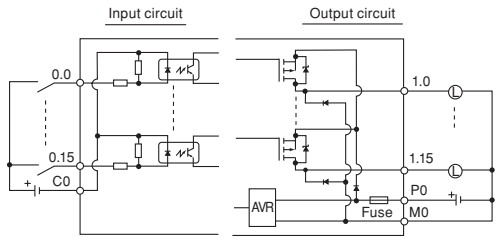

NP1W6406T

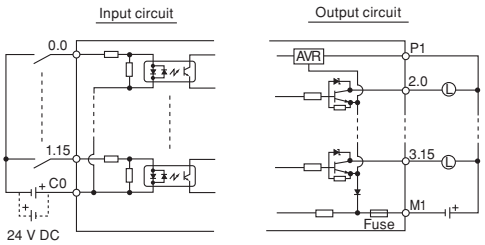

NP1W6406U

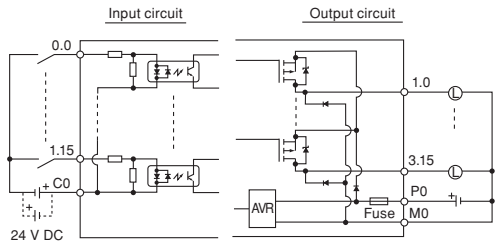

High-Speed Digital Input Module: NP1X3206-A

- Digital input module with pulse catch input
- Pulse catch input of min. 20 μs or normal input
- Pulse counter input function of max. 20 kHz, 4 ch (2-phase)

■Specifications

Model	Input format	No. of input points	Rated voltage	Rated current	Standard operation range		Input delay time		Insulation method	Status indication	No. of points/ common	External connections	Internal current consumption (24 V DC)	Weight
					OFF→ON	ON→OFF	OFF→ON	ON→OFF						
NP1X3206-A	24V DC source type	32 points	24 V DC	4 mA	15 to 30 V	0 to 5 V	0 to 100 ms Variable by parameter setting		Photocoupler insulation	LED indication	32 points x 1	Connector	50 mA or less	Approx. 130 g

■Internal circuit diagram

NP1X3206-A

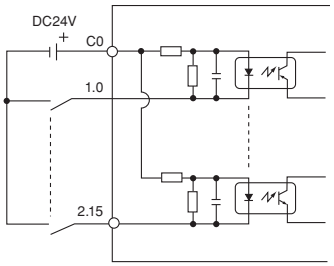

Pulse Train Output Built-in Digital Output Module: NP1Y32T09P1-A

- Module with transistor output and pulse train output built-in
- Pulse train output (20 kHz) can be selected up to max. 4 ch x 2 phases

■Specifications

Model	Output format	No. of output points	Rated voltage	Max. load current		Output delay time		Insulation method	Status indication	No. of points/ common	Surge protection	External connections	Internal current consumption (24 V DC)	Weight
				1 point	Common	OFF→ON	ON→OFF							
NP1Y32T09P1-A	Transistor output sink type	32 point	12 to 24 V DC	0.12A	3.2 A	Port 1 to 8: 20 μs or less Port 9 to 32: 1 ms or less		Photocoupler insulation	LED indication	32 points x 1	Zener diode	Connector	50 mA or less	Approx. 200 g

■Built-in pulse train output specifications

Item	Specifications
No. of pulse train output channels	4 channels (max.) x 2 phases (Only with the pulse train output mode selected)
Max. output frequency	20 kHz
Pulse output mode	(1) Forward pulse, reverse pulse (2) Pulse train + sign
Output pulse counting method	Built-in 16-bit up-down counter
Operation mode	Start, stop, clear Ring operation Frequency/rotation direction/output form setting
No. of general-purpose output points	32 points (min. 24 points in pulse train output mode)

■Internal circuit diagram

NP1Y32T09P1-A

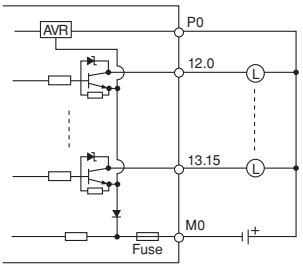

Analog Input Module: NP1AX□

■Performance specifications

Model	Input format	No. of channels	Signal range	Digital converted value	Digital resolution	Tolerance	Converting speed	No. of occupied words (input + output)	Insulation between channels	External connections	Internal current consumption (24 V DC)	Weight
NP1AX04-MR	Multi-range input	4 ch	-5 to +5 V DC 0 to 20 mA DC 4 to 20 mA DC -20 to +20 mA DC	-500 to +500 or 0 to 1000	10 bits	±0.5% or less (at 25˚C) ±1.0% or less (at 0 to 55˚C)	4 ms/ 4 ch	8 words + 2 words	Non-insulation	Terminal block	120 mA or less	Approx. 200 g
NP1AXH4-MR			0 to 5V DC 0 to 10V DC 1 to 5 V DC -10 to +10 V DC	-8000 to +8000 or 0 to 16000	14 bits	±0.1% or less (at 25˚C) ±1.0% or less (at 0 to 55˚C)	1 ms/ 4 ch					
NP1AX08V-MR		8 ch	0 to 5V DC 0 to 10V DC 1 to 5 V DC -5 to +5 V DC -10 to +10 V DC	-500 to +500 or 0 to 1000	10 bits	±0.5% or less (at 18 to 28˚C) ±1.0% or less (at 0 to 55˚C)	5 ms/ 8 ch	16 words + 2 words				
NP1AX08I-MR			0 to 20 mA DC 4 to 20 mA DC -20 to +20 mA DC									
NP1AXH8V-MR			0 to 5V DC 0 to 10V DC 1 to 5 V DC -10 to +10 V DC	0 to 16000 -8000 to +8000	14 bits	±0.1% or less (at 18 to 28˚C) ±0.2% or less (at 0 to 55˚C) ±0.3% (at 0 to 55˚C, 1 to 5 V range)	1.2 ms or less/ 8 ch	8 words + 4 words			200mA or less	Approx. 240 g
NP1AXH8I-MR			0 to 20 mA DC 4 to 20 mA DC -20 to +20 mA DC	0 to 16000		±0.1% or less (at 18 to 28˚C) ±0.4% or less (at 0 to 55˚C)						
NP1AXH8VG-MR			0 to 5V DC 0 to 10V DC 1 to 5 V DC -10 to +10 V DC	-32000 to +32000 or 0 to 32000	16 bits	±0.05% or less (at 18 to 28˚C) *1	30 ms or less/ 8 ch		Insulation		150mA or less	Approx. 280 g
NP1AXH8IG-MR			0 to 20 mA DC 4 to 20 mA DC -20 to +20 mA DC			±0.239% or less (at 10 to 55˚C)						

*1 Take 40 minutes or more for warm-up (no need to warm-up for ±0.2%)

■Characteristic diagram

Characteristic pattern 1

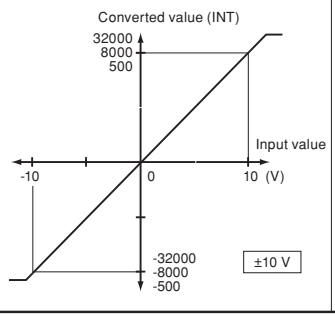

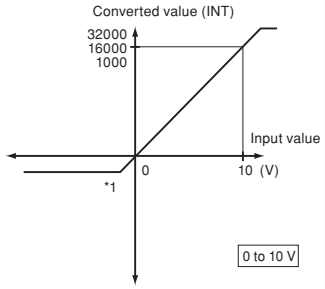

Characteristic pattern 2

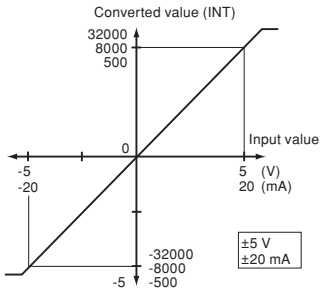

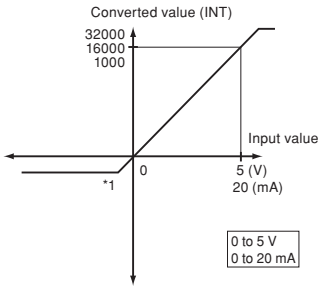

Characteristic pattern 3

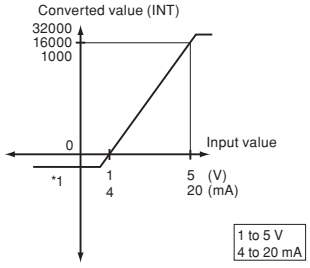

*1 For NP1AX04-MR and NP1AXH4-MR, the lower limit value (digital value) is "0".

■Input value and converted value

Input range	Characteristic pattern 1			Characteristic pattern 2			Characteristic pattern 3		
	Resolution			Resolution			Resolution		
	10 bits	14 bits	16 bits	10 bits	14 bits	16 bits	10 bits	14 bits	16 bits
-5 to 5 V				±500	±8000				
0 to 5 V				1000	16000	32000			
1 to 5 V							1000	16000	32000
0 to 10 V	1000	16000	32000						
-10 to 10 V	±500	±8000	±32000						
0 to 20 mA				1000	16000	32000			
4 to 20 mA							1000	16000	32000
-20 to 20 mA				±500	±8000	±32000			

Analog Output Module: NP1AY□

■Performance specifications

Model	Output format	No. of channels	Signal range	Digital converted value	Digital resolution	Tolerance	Converting speed	No. of occupied words (input + output)	Insulation between channels	External connections	Internal current consumption (24 V DC)	Weight
NP1AY02-MR	Multi-range output	2	-5 to +5 V DC 0 to 20 mA DC 4 to 20 mA DC	-500 to +500 or 0 to 1000	10 bits	±0.5% or less (at 25˚C) ±1.0% or less (at 0 to 55˚C)	2 ms/ 2 ch	2 words + 4 words	Non-insulation	Terminal block	120 mA or less	Approx. 200 g
NP1AYH2-MR			0 to 5 V DC 0 to 10 V DC 1 to 5 V DC -10 to +10 V DC	-8000 to +8000 or 0 to 16000	14 bits	±0.1% or less (at 25˚C) ±1.0% or less (at 0 to 55˚C)	1 ms/ 2 ch					
NP1AYH4V-MR		4	0 to 5V DC 0 to 10 V DC 1 to 5 V DC -10 to +10 V DC	-8000 to +8000 or 0 to 16000		±0.1% or less (at 18 to 28˚C) ±0.2% or less (at 0 to 55˚C) ±0.3% (at 0 to 55˚C, 1 to 5 V range)	0.5 ms/ 4 ch	4 words + 4 words			200 mA or less	Approx. 240 g
NP1AYH4I-MR			0 to 20 mA DC 4 to 20 mA DC	0 to 16000	15 bits	±0.1% or less (at 18 to 28˚C) ±0.4% or less (at 0 to 55˚C)						
NP1AYH4VG-MR			0 to 5V DC 0 to 10V DC 1 to 5 V DC -10 to +10 V DC	-16000 to +16000 or 0 to 16000		±0.1% or less (at 18 to 28˚C) *1 ±0.289% or less (at 0 to 55˚C)	0.6 ms/ 4 ch		Insulation			Approx. 300 g
NP1AYH4IG-MR			0 to 20 mA DC 4 to 20 mA DC	0 to 16000		±0.1% or less (at 18 to 28˚C) *1 ±0.289% or less (at 0 to 55˚C)					250 mA or less	
NP1AYH8V-MR		8	0 to 5V DC 0 to 10V DC 1 to 5 V DC -10 to +10 V DC	-8000 to +8000 or 0 to 16000	14 bits	±0.1% or less (at 18 to 28˚C) ±0.2% or less (at 0 to 55˚C) ±0.3% (at 0 to 55˚C, 1 to 5 V range)	1 ms/ 8 ch	4 words + +8 words	Non-insulation		240 mA or less	Approx. 240 g
NP1AYH8I-MR			0 to 20 mA DC 4 to 20 mA DC	0 to 16000		±0.1% or less (at 18 to 28˚C) ±0.4% or less (at 0 to 55˚C)					300 mA or less	

*1 Take 30 minutes or more for warm-up (no need to warm-up for ±0.2%)

■Characteristic diagram

Characteristic pattern 1

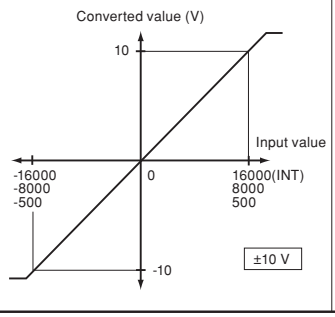

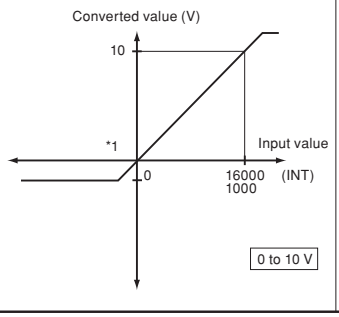

Characteristic pattern 2

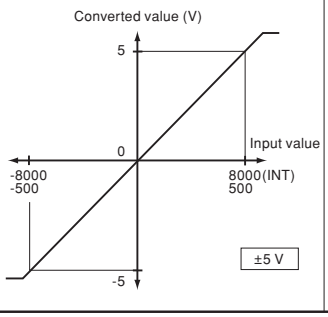

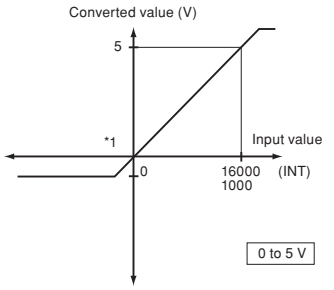

Characteristic pattern 2

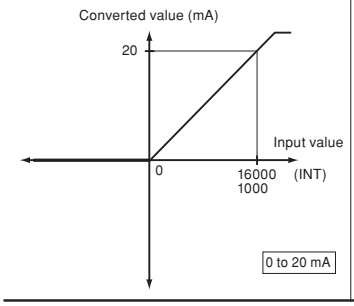

Characteristic pattern 3

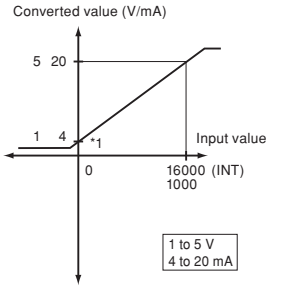

*1 For NP1AY02-MR and NP1AYH2-MR, the lower limit value (digital value) is "0".

■Output value and converted value

Output range	Characteristic pattern 1			Characteristic pattern 2			Characteristic pattern 3		
	Resolution			Resolution			Resolution		
	10 bits	14 bits	15 bits	10 bits	14 bits	15 bits	10 bits	14 bits	15 bits
-5 to 5 V				±500	±8000				
0 to 5 V				1000	16000	16000			
1 to 5 V							1000	16000	16000
0 to 10 V	1000	16000	16000						
-10 to 10 V	±500	±8000	±16000						
0 to 20 mA				1000	16000	16000			
4 to 20 mA							1000	16000	16000

Analog Input/Output Module: NP1AWH6-MR

Performance specifications

Model	I/O form	No. of channels	Signal range	Digital converted value	Digital resolution	Tolerance	Converting speed	No. of occupied words (Input + output)	Insulation between channels	External connections	Internal current consumption (24 V DC)	Weight
NP1AWH6-MR	Multi-range I/O	4	Voltage input: 0 to 5 V DC 0 to 10 V DC 1 to 5 V DC -10 to +10 V DC	-8000 to +8000 or 0 to 16000	14 bits	±0.1% or less (at 18 to 28˚C) ±0.2% or less (at 0 to 55˚C) ±0.3% (0 to 55˚C, 0 to 20 mA/ 4 to 20 mA ranges)	1 ms/ 4 ch	4 words + 4 words	Non-insulation	Terminal block	200 mA or less	Approx. 240 g
			Current input: 0 to 20 mA DC 4 to 20 mA DC -20 to +20 mA DC									
		2	Voltage output: 0 to 5 V DC 0 to 10 V DC 1 to 5 V DC -10 to +10 V DC				0.5 ms/ 2 ch					
			Current output: 0 to 20 mA DC 4 to 20 mA DC									

Characteristic diagram

- Analog input

Characteristic pattern 1

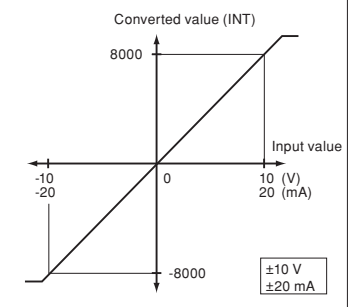

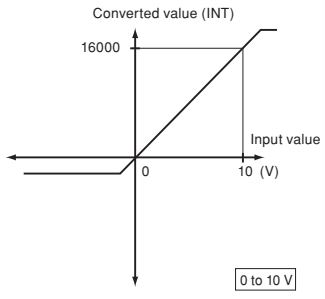

Characteristic pattern 2

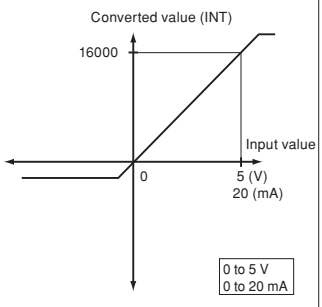

Characteristic pattern 3

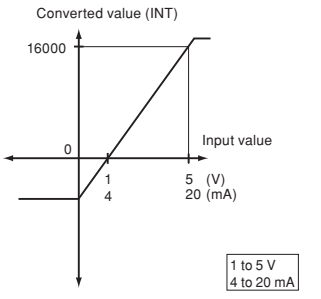

- Analog output

Characteristic pattern 1

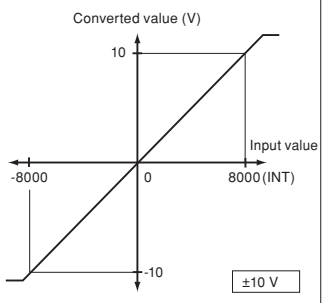

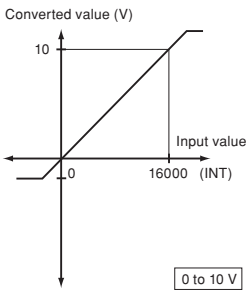

Characteristic pattern 2

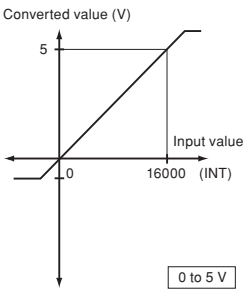

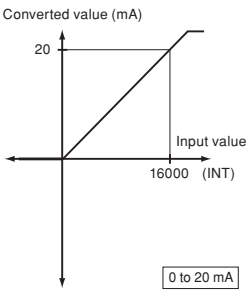

Characteristic pattern 3

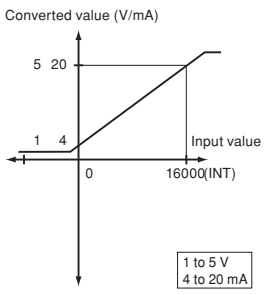

Input/output value and converted value

- Analog input

Input range	Characteristic pattern 1	Characteristic pattern 2	Characteristic pattern 3
0 to 5 V		16000	
1 to 5 V			16000
0 to 10 V	16000		
-10 to 10 V	±8000		
0 to 20 mA		16000	
4 to 20 mA			16000
-20 to 20 mA	±8000		

- Analog output

Output range	Characteristic pattern 1	Characteristic pattern 2	Characteristic pattern 3
0 to 5 V		16000	
1 to 5 V			16000
0 to 10 V	16000		
-10 to 10 V	±8000		
0 to 20 mA		16000	
4 to 20 mA			16000

Resistance Thermometer Element Input Module: NP1AX□□-PT

- IEC Standards conformed sensors (platinum resistance thermometer bulb) can be connected. (Batch setting is possible for all channels.)
- Error detection (resistance thermometer element wire breakage detection, resistance thermometer element shunt detection, etc.) is possible.
- Temperature scale is selectable between Celsius and Fahrenheit.
- The NP1AXH6G-PT provides high accuracy and high resolution, thereby enabling fine-grained measurements.

■Specifications

Item	Specifications	
Model	**NP1AXH4-PT**	**NP1AXH6G-PT**
Measurement accuracy *2	±0.3% (ambient temperature 18 to 28˚C *1 ±0.7% (ambient temperature 0 to 55˚C)	±0.05 to ±0.07% (ambient temperature 18 to 28˚C) ±0.239% (ambient temperature 0 to 55˚C)
Allowable input wiring resistance	10 Ω or less	20 Ω or less
Sampling interval	500 ms/4 ch	45 ms/6 ch
Input filtering time	Hardware (time constant): 50 ms Software filter: 1 s (variable from 1 to 100 s by program)	Hardware (time constant): 30 ms Software filter: 1 to 100 s, Moving average over: 4 times, 8 times, 16 times, 32 times. (Configurable per 1s unit. Default value: Moving average over 32 times)
No. of input channels	4 ch (insulation between channels)	6 ch (insulation between channels)
No. of occupied I/O points	Input: 8 words, output: 8 words	Input: 8 words, output: 4 words
Internal current consumption	150 mA or less	150 mA or less
External connections	Detachable terminal block M3, 20 poles	Detachable terminal block M3, 20 poles
Weight	Approx. 240 g	Approx. 300 g

*1 In the range from 0.0 to 100.0°C, and from -20.0 to 80.0°C, full scale ±0.4% ±1 Digit (ambient temperature: 18 to 28°C), ±0.8% ±1 Digit (ambient temperature: 0 to 55°C).
*2 For more information, refer to the User's Manual: FEH208.

■Type of resistance thermometer element and resolutions

- **NP1AXH4-PT**

Type of resistance thermometer element	Celsius (˚C) Input range	Fahrenheit (˚F) Input range	Resolution of data
PT	0 to 200	32 to 392	1
	-20 to 80	-4 to 176	
	0 to 100	32 to 212	
	0 to 400	32 to 752	
	-200 to 200	-328 to 392	
	-200 to 600	-328 to 1112	
	0.0 to 200.0	32.0 to 392.0	0.1
	-20.0 to 80.0	-4.0 to 176.0	
	0.0 to 100.0	32.0 to 212.0	
	0.0 to 400.0	32.0 to 752.0	
	-200.0 to 200.0	-328.0 to 392.0	
	-200.0 to 600.0	-328.0 to 1112.0	
JPt	0 to 200	32 to 392	1
	-20 to 80	-4 to 176	
	0 to 100	32 to 212	
	0 to 400	32 to 752	
	-200 to 200	-328 to 392	
	-200 to 500	-328 to 932	
	0.0 to 200.0	32.0 to 392.0	0.1
	-20.0 to 80.0	-4.0 to 176.0	
	0.0 to 100.0	32.0 to 212.0	
	0.0 to 400.0	32.0 to 752.0	
	-200.0 to 200.0	-328.0 to 392.0	
	-200.0 to 500.0	-328.0 to 932.0	

Note: The measuring range of temperature is ±5% of the input range span.

- **NP1AXH6G-PT**

Platinum resistance thermometer element Type	Celsius (˚C) Input range	Fahrenheit (˚F) Input range	Resolution of data
PT	0 to 200	32 to 392	1
	-20 to 80	-4 to 176	
	0 to 100	32 to 212	
	0 to 400	32 to 752	
	-200 to 200	-328 to 392	
	-200 to 600	—	
	-200 to 850	-328 to 1562	
	0.0 to 200.0	32.0 to 392.0	0.1
	-20.0 to 80.0	-4.0 to 176.0	
	0.0 to 100.0	32.0 to 212.0	
	0.0 to 400.0	32.0 to 752.0	
	-200.0 to 200.0	—	
	-200.0 to 600.0	-328.0 to 1112.0	
	-200.0 to 850.0	-328.0 to 1562.0	
	-20.00 to 80.00	-4.00 to 176.00	0.01
JPt	0 to 200	32 to 392	1
	-20 to 80	-4 to 176	
	0 to 100	32 to 212	
	0 to 400	—	
	-200 to 200	-328 to 392	
	-200 to 500	-328 to 932	
	0.0 to 200.0	32.0 to 392.0	0.1
	-20.0 to 80.0	-4.0 to 176.0	
	0.0 to 100.0	32.0 to 212.0	
	0.0 to 400.0	32.0 to 752.0	
	-200.0 to 200.0	-328.0 to 392.0	
	-200.0 to 500.0	-328.0 to 932.0	

■Characteristic diagram

• NP1AXH4-PT PT 0.0 to 400.0˚C

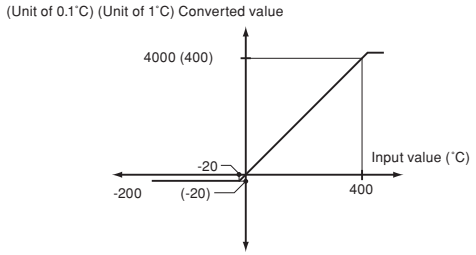

• NP1AXH6G-PT PT 0.0 to 400.0˚C

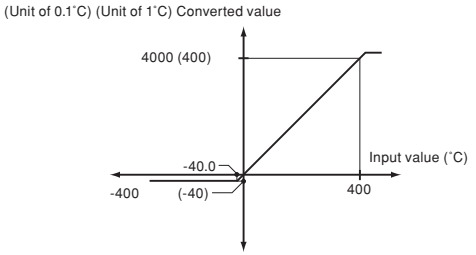

Thermo-Couple Input Module: NP1AXH□□-TC

- The following thermocouples that conform to IEC, ASTN and DIN Standards can be connected. (Batch setting is possible for all channels.)
  JIS standards: R, K, J, S, B, E, T, N IEC standards: R, K, J, S, B, E, T, N
  ASTM standards: W5Re, W26Re, PL II DIN standards: U, L
- Error detection (the detection of sensor wire breakage) is possible.
- Temperature scale is selectable between Celsius and Fahrenheit.
- The NP1AXH8G-TC provides high accuracy and high resolution, thereby enabling fine-grained measurements.

■Specifications

Item	Specifications	
Model	**NP1AXH4-TC**	**NP1AXH8G-TC**
Measurement accuracy *3	±0.3% (ambient temperature 18 to 28°C) *1 ±0.7% (ambient temperature 0 to 55°C)	±0.05% (ambient temperature 25°C) *2
Cold contact compensation accuracy	±1°C (ambient temperature 18 to 28°C)	±1°C (ambient temperature 18 to 28°C)
Sampling interval	500 ms/4 ch	60 ms/8 ch
Input filtering time	Hardware (time constant): 50 ms Digital filter: 1s (variable from 1 to 100s by program)	Hardware (time constant): 30 ms Digital filter: 1 s (variable from 1 to 100 s by program)
No. of input channels	4 ch (insulation between channels)	8 ch (insulation between channels)
No. of occupied words	Input: 8 words, output: 8 words	Input: 8 words, output: 4 words
Internal current consumption	150 mA or less	150 mA or less
External connections	Detachable terminal block M3, 20 poles	Detachable terminal block M3, 20 poles
Weight	Approx. 240 g	Approx. 300 g

*1 In the range from K (0.0 to 400.0°C, 0.0 to 500.0°C, and from 0.0 to 800.0°C), and T (0.0 to 400.0°C), full scale ±0.4% (ambient temperature: 18 to 28°C), ±0.8% (ambient temperature: 0 to 55°C).
*2 The measurement accuracy depends on the sensor, and measurement temperature.
*3 For more information, refer to the User's Manual: FEH209.

■Thermo-couple types and resolutions

- **NP1AXH4-TC**

Thermo-couple type	Celsius (˚C) Input range	Fahrenheit (˚F) Input range	Resolution of data
K	0 to 1300	32 to 2372	1
	0 to 500	32 to 932	
	0 to 800	32 to 1472	
	0.0 to 400.0	32.0 to 752.0	0.1
	0.0 to 500.0	32.0 to 932.0	
	0.0 to 800.0	32.0 to 1472.0	
B	0 to 1800	32 to 3272	1
R	0 to 1700	32 to 3092	
S	0 to 1700	32 to 3092	
E	0 to 400	32 to 752	
	0 to 700	32 to 1292	
	0.0 to 700.0	32.0 to 1292.0	0.1
J	0 to 500	32 to 932	1
	0 to 800	32 to 1472	
	0.0 to 400.0	32.0 to 752.0	0.1
	0.0 to 500.0	32.0 to 932.0	
	0.0 to 800.0	32.0 to 1472.0	
T	0 to 400	32 to 752	1
	0.0 to 400.0	32.0 to 752.0	0.1
N	0 to 1300	32 to 2372	1
U	0 to 400	32 to 752	
	0 to 600	32 to 1112	
	0.0 to 600.0	32.0 to 1112.0	0.1
L	0 to 400	32 to 752	1
	0 to 900	32 to 1652	
	0.0 to 400.0	32.0 to 752.0	0.1
	0.0 to 900.0	32.0 to 1652.0	
PL II	0 to 1200	32 to 2372	1
W5Re, W26Re	0 to 2300	32 to 4172	

Note: The measuring range of temperature is ±5% of the input range span.

- **NP1AXH8G-TC**

Thermo-couple type	Celsius (˚C) Input range	Fahrenheit (˚F) Input range	Resolution of data
K	-200 to 1370	-328 to 2498	1
	-200 to 500	-328 to 932	
	-100.0 to 1370.0	-148.0 to 2498.0	0.1
	-100.0 to 500.0	-148.0 to 932.0	
	-100.0 to 230.0	-148.0 to 446.0	
	0.00 to 300.00	—	0.05
B	0 to 1820	32 to 3308	1
R	-50 to 1760	-58 to 3200	
S	-50 to 1760	-58 to 3200	
E	-250 to 1000	-418 to 1832	
	-120.0 to 1000.0	-184.0 to 1832.0	0.1
	-120.00 to 160.00	—	0.03
J	-200 to 500	-328 to 932	1
	-200 to 800	-328 to 1472	
	-200 to 1100	-328 to 2012	
	-100.0 to 500.0	-148.0 to 932.0	0.1
	-100.0 to 800.0	-148.0 to 1472.0	
	-100.0 to 1100.0	-148.0 to 2012.0	
	-80.00 to 180.00	—	0.04
T	-260 to 400	-436 to 752	1
	-150.0 to 200.0	-238.0 to 392.0	0.1
N	-200 to 1300	-328 to 2372	1
U	-150 to 550	-238 to 1022	
	0.0 to 550.0	32.0 to 1022.0	0.1
L	-150 to 400	-238 to 752	1
	-150 to 850	-238 to 1562	
	0.0 to 400.0	32.0 to 752.0	0.1
	0.0 to 850.0	32.0 to 1562.0	
PL II	0 to 1300	32 to 2372	1
	0.0 to 1300.0	32.0 to 2372.0	0.1
W5Re, W26Re	0 to 2300	32 to 4172	1

Distributor Module: NP1AXH4DG-MR

- Converts signals (4 to 20 mA) from two-wire transmitters, such as differential pressure flow meters, water gauges, and temperature communicators, into digital data.
- A transducer is unnecessary as the module is insulated with high pressure-resistance (1000 V AC) between channels.
- An external power supply is unnecessary as a power supply for two-wire transmitters is embedded in each channel.
- Provides high precision and high resolution, thereby allowing detailed measurement.
- The square root extraction function allows you to input the data directly as like an industry value, to items such as the output from differential pressure flow meters and other devices that need to extract the square root.
- It can be also used as 4 channels of an insulation AI (amperage: 0 to 20 mA, 4 to 20 mA).
- A product compatible with the flow rate pulse input is also prepared (format: NP1F-PI4).

■Specifications

Item	Specifications
Model	**NP1AXH4DG-MR**
No. of input points	4 points
Analog input range	4 to 20 mA, 0 to 20 mA
Input impedance	250 Ω
Max. allowable voltage	30 mA
Input filter	Approx. 200 μs or less (Hardware: Primary delay time constant)
Resolution	16 bits
Digital conversion value (INT model)	0 to 32000
Reference precision	±0.1% of F.S.R (Ta = 25°C)
Temperature coefficient	±0.007%/°C
Conversion cycle	30 ms/4 ch
Warm up time *1	40 minutes or more
Power supply for transmission machine *2	1) Output voltage: 24 V DC ±15% 2) Permissible current: 23 mA or less 3) Short-circuit limitation current: Approx. 25 mA 4) Ripple noise: Approx. 250 mV (p-p) or less 5) Suddenly change of the load: 4V (0-P) or less (condition of the suddenly change of the load: 0 to 23 mA)
Response time *3	Conversion cycle + tact cycle (ms)
No. of occupied words	Input: 8 words + output 4 words
Insulation method	Photo-coupler insulation or transformer insulation (Between I/O terminals and FG) Between analog input terminal and channel: Transformer insulated
Dielectric strength	1000 V AC, 1 minute, between I/O terminals and FG (short circuit current: 10 mA) 1000 V AC, 1 minute, between analog input terminals and channels (short circuit current: 10 mA)
Insulation resistance	10 MΩ or more with 500 V DC megger, between I/O terminals and FG 10 MΩ or more with 500 V DC megger, between analog input terminals and channels
Internal current consumption	390 mA or less (When the transmission machine power supply used.) 170 mA or less (When the transmission machine power supply unused.)
Non-use output treatment	Basically, open
Applicable cable	Use the twisted pair wire with the shield. (Wiring length: 500 m or less)
Weight	Approx. 290 g
External connections	Detachable screw terminal block (M3 x 20 poles)

*1 Reference precision = 0.22% (no need to warm-up when Ta = 25°C)
*2 This can be reduced depending on the used number of transmission machine power supply.
For more information, refer to the User's Manual: FEH432.
An ambient temperature during short circuit should be 40°C or less.
(40 to 50°C: 10 minutes or less).
*3 For a step response,
response time = 30 ms x average number of movements + 20 ms + input filter x 8 + tact cycle
= 55.6 ms (no movement averaging, 5 ms tact cycle)

■External wiring

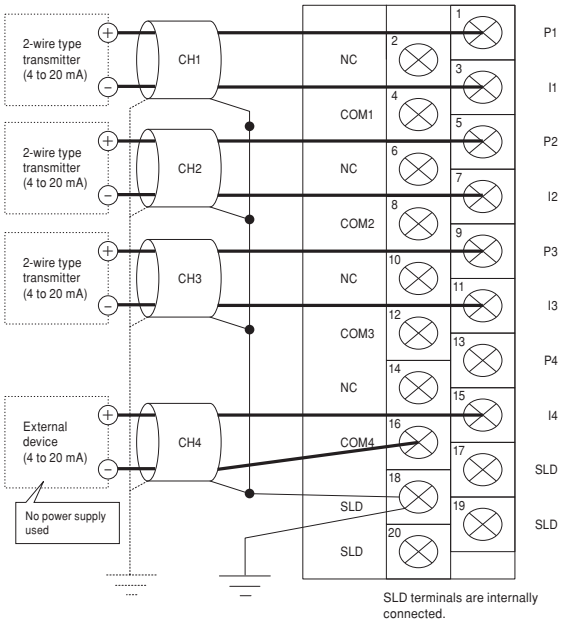

■Characteristic diagram

4 to 20 mA range (Evolution OFF)	4 to 20 mA range (Evolution ON)	0 to 20 mA range

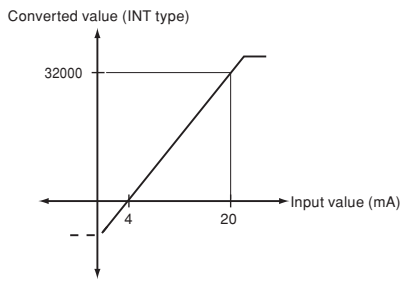

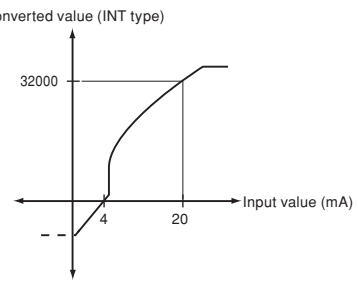

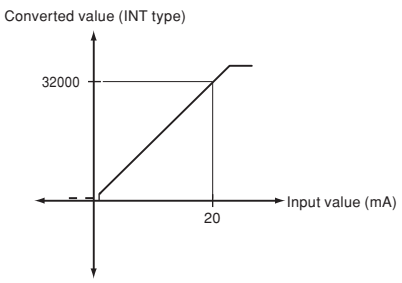

Note: The broken line represents the saturated area. Inputs below 0.8 mA may not be measured accurately.

Duplex Analog Output Module: NP1AYH8VHR-MR

■Features

- Duplication of analog output
  - · Analog output can be duplicated with the duplex switch control signal.
  - · Switching from the operation to the waiting can be performed by the application program or the front switch.
  - · The status of operation and waiting can be confirmed with the OUT LED on the front face of the module.
  - · The terminal block drop detection function is built in.

- Duplication of analog output by the instruction from the 2-system or 3-system of controller.
  Operation instruction is available from controllers (max. of 3 systems) of different configurations to this module via the communication module.

Operation mode	Overview
Single mode	Output data are provided by 1 unit of CPU and are D/A-converted.
DUPLEX mode (CPU duplication)	One of output data provided by 2 units of CPU is selected and D/A-converted.
DUAL mode (CPU duplication)	A mid value is selected from output data provided by 2 units of CPU and previous output value, and D/A-converted.
Triple mode (CPU triplication)	A mid value is selected from output data provided by 3 units of CPU, and D/A-converted.

- High speed and high accuracy
  High-speed conversion period of 3.2 ms/8 ch and high standard accuracy of ±0.25% enable a detailed control.

■Specifications

Model	NP1AYH8VHR-MR			
No. of output points	8 points			
Analog output range	0 to 5 V	1 to 5 V	0 to 10 V	-10 to +10 V
Load impedance	500 Ω or more		1 kΩ or more	
Max. resolution	1.25 mV			
Digital conversion	0 to 16000		0 to 16000	-8000 to 8000
Total accuracy	±0.25% of F.S.R			
Temperature coefficient	±0.007%/°C			
Max. noise deviation	±0.6% of F.S.R			
Conversion cycle	3.2 ms/8 points			
Response time	Conversion cycle + tact cycle (ms)			
Load short protection	Provided			
No. of occupied words	Input: 16 W + output: 34 W			
Insulation method	Between analog input terminal and FG: Photocoupler/transformer insulated			
Dielectric strength	500 V AC, 1 minute, between analog output terminals and FG (short-circuit current: 10 mA)			
Insulation resistance	10 MΩ or more with the 500 V DC of DC megger between total analog output terminals and FG			
Internal current consumption	200 mA or less (at rated load)			
Non use output treatment	Basically, open			
Applicable cable	Analog output cable Use an AWG #22 to 18 shielded twisted pair line.			
	Duplex switch signal cable (max. wire distance: 5m) Use an AWG #22 to 18 shielded straight cable.			
Weight	Approx. 260 g			
External connections	Detachable screw terminal block (M3 x 20 poles)			
Dimension	W35 x H105 x D111 mm (26 mm protrusion)			

■Characteristic diagram

0 to 5 V range (for LSB)	0 to 5 V range (for %)
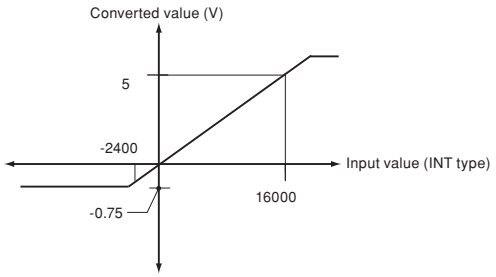	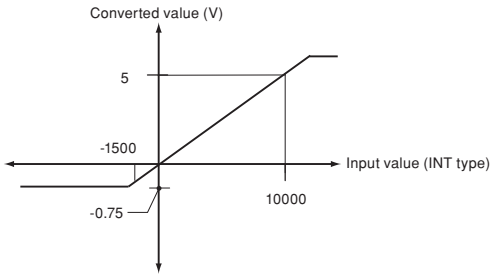

I/O Connection of Connector-Type Modules

The following types of modules are connected using connectors and recommended for the I/O connection use.

■Connector type module list

Item	Model (ordering code)	Specifications
Digital input module	**NP1X3206-A**	24 V DC, 32 points, 4 mA 0 ms to 100 ms variable, with 20 kHz x 4 ch. built-in pulse counter
	NP1X3206-W	24 V DC, 32 points, 4 mA 1 ms to 100 ms variable
	NP1X3202-W	5/12 V DC, 32 points, 3/9 mA, 1 to 100 ms variable
	NP1X6406-W	24 V DC, 64 points, 4 mA 1 ms to 100 ms variable
Digital output module	**NP1Y32T09P1-A**	Tr. Sink, 24 V DC, 32 points, 0.12 A/point, 3.2 A/common, with 20 kHz x 4 ch. built-in pulse train output
	NP1Y32T09P1	Transistor sink, 12 to 24 V DC, 32 points, 0.12 A/point, 3.2 A/common
	NP1Y64T09P1	Transistor sink, 12 to 24 V DC, 64 points, 0.12 A/point, 3.2 A/common
	NP1Y32U09P1	Transistor source, 12 to 24 V DC, 32 points, 0.12 A/point, 3.2 A/common
	NP1Y64U09P1	Transistor source, 12 to 24 V DC, 64 points, 0.12 A/point, 3.2 A/common
Digital I/O mixed module	**NP1W3206T**	24 V DC, 16-point source input, 12 to 24 V DC, Tr sink 16-point output
	NP1W3206U	24 V DC, 16-point sink input, 12 to 24 V DC, Tr source 16-point output
	NP1W6406T	24 V DC, 32-point bidirectional input, 12 to 24 V DC, Tr sink 32-point output
	NP1W6406U	24 V DC, 32-point bidirectional input, 12 to 24 V DC, Tr source 32-point output
High-speed counter module	**NP1F-HC2**	500 kHz x 2 ch, 90-degree phase difference 2-phase signal, pulse + directional signal, others
Multi-channel high-speed counter module	**NP1F-HC8**	50kHz x 8 ch, 90-degree phase difference 2-phase signal, pulse + directional signal, others
Pulse train output positioning control module	**NP1F-HP2**	Pulse train command 250 kHz x 2 ch.
Two-axis pulse train multiple positioning control module: (open collector output)	**NP1F-MP2**	output pulse: 250 kHz, feedback pulse: 500 kHz
Two-axis pulse train multiple positioning control module: (differential output)	**NP1F-HD2**	output pulse: 5 MHz
	NP1F-HD2A	output pulse: 5 MHz, feedback pulse: 5 MHz
Two-axis analog multiple positioning control module	**NP1F-MA2**	feedback pulse: 500 kHz
Four-axis pulse train multiple positioning control module: (differential output)	**NP1F-HD4**	output pulse: 5 MHz, feedback pulse: 5 MHz

Note: Connector model implemented in the module is FCN-365P040-AU (plug) manufactured by Fujitsu Component Ltd.

■Recommended connectors

Types	Model (Fujitsu Component Ltd.)	
	Jack	Cover
Soldered type*1	FCN-361J040-AU	FCN-360C040-B (B type)
Crimp type	FCN-363J040 (Housing)	FCN-360C040-D (D type: Wide mouthed type)
	FCN-363J-AU (Contact)	FCN-360C040-E (E type: Long screw type)
Wire wrapping type	FCN-362J040-AU	FCN-360C040-J2 (J2 type: Thinly, obliquely type)
Insulation displacement type	FCN-367J040-AU/FW	The cover is not necessary.

*1 Fuji Electric solder type connector (NP8V-CN) is prepared (cover attached: FCN-360C040-B).
Note: For more details, refer to each manual.

■Recommended relay terminal blocks (Fuji Electric Technica Co., Ltd.)

- Type/model/ordering code
- Main unit

Model	Number of terminal block poles	Number of connector poles	Rating (Connector)	Performance	Ordering code
AU-CW41B1-11	41	40	Insulation voltage: 60 V (AC, DC) Thermal current: 1 A (at 40°C)	Insulation resistance: 100 MΩ or more Voltage resistance: 500 V, 1 minute Allowable ambient temperature: -5 to +40°C Allowable ambient humidity: 45 to 85%RH Flame resistance: UL94-V1	LP1W-41BA5

- Outline dimensional drawing (AU-CW41B1-11 type)

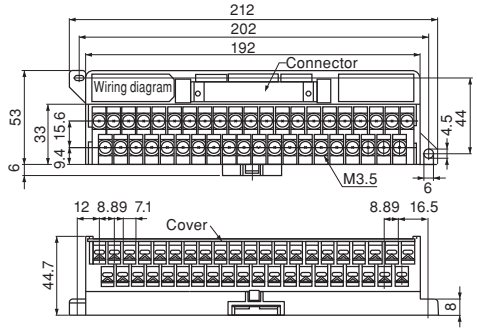

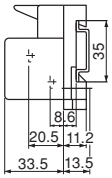

Terminal arrangement

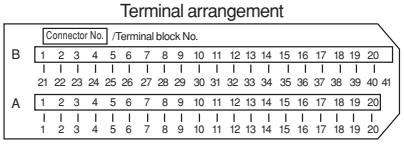

AU-CW41B1-11 type connector installation direction (view from the engagement surface)

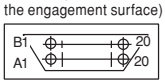

- Connection cable

Applied terminal block type	No. of poles	Cable type	Connection cable type	Ordering code
AU-CW41B1-11	40	Multi-conductor cable	AUX011-40 □	LP911-40 □
		Flat cable	AUX021-40 □	LP921-40 □

Note: "□" indicates the length of multi-core cables and flat cables.
1:1m (standard), 2:2m, 3:3m

- Cable wiring diagram
  [Multi-core cable with connector]

AUX011-40□ type (Fujitsu product)

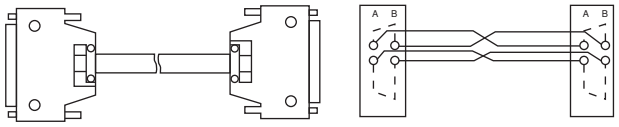

[Flat cable with connector]

AUX021-40□ type (Fujitsu product)

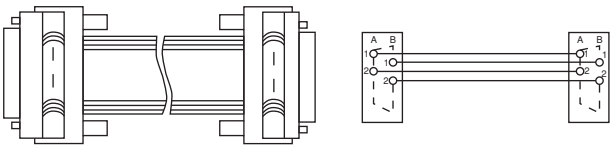

■Recommended relay terminal blocks (Fuji Electric Technica Co., Ltd.)

- Specifications

Model (ordering code)	Number of terminal block poles	Connector		Performance
		No. of poles	Flame resistance: UL94V-0 rating	
LP5W-40H1	40 M3 screw Supported by screws Standard tightening torque: 1.2N·m Compliant cable: Up to 1.25mm²	40 Mounted connector: FCN-364P040-AU (plug) Fujitsu Component Ltd.	Insulation voltage: 125 V (AC, DC) Rated thermal current: 1A	Insulation resistance: 100 MΩ or more Voltage resistance: For 1 min. at 600 V Allowable ambient temperature: -10 to +50°C Flame resistance: UL94V-0

- Outline dimensional drawing

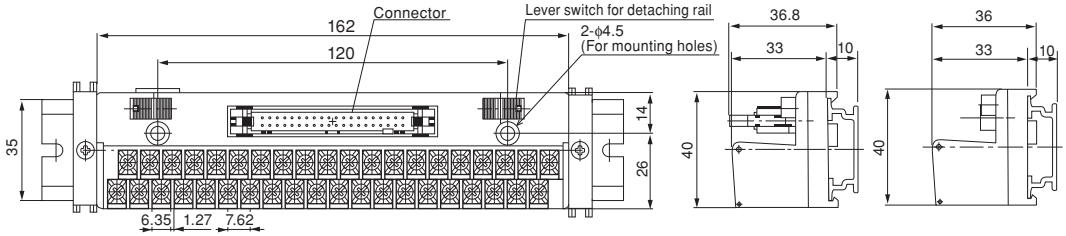

- Wiring diagram

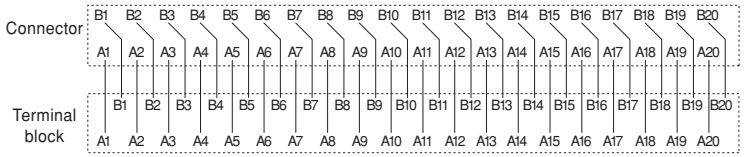

- Applicable connector

Types	Model (Fujitsu Component Ltd.)	
	Jack	Cover
Soldered type*1	FCN-361J040-AU	FCN-360C040-B (B type) FCN-360C040-D (D type: Wide mouthed type) FCN-360C040-E (E type: Long screw type)
Crimp type	FCN-363J040 (Housing) FCN-363J-AU (Contact)	
Wire wrapping type	FCN-362J040-AU	
Insulation displacement type	FCN-367J040-AU/FW	The cover is not necessary.

*1 Fuji Electric solder type connector (NP8V-CN) is prepared (cover attached: FCN-360C040-B).
Note: For more details, refer to each manual.

Terminal Relay
(Model by Fuji Electric FA Components & Systems Co., Ltd.)

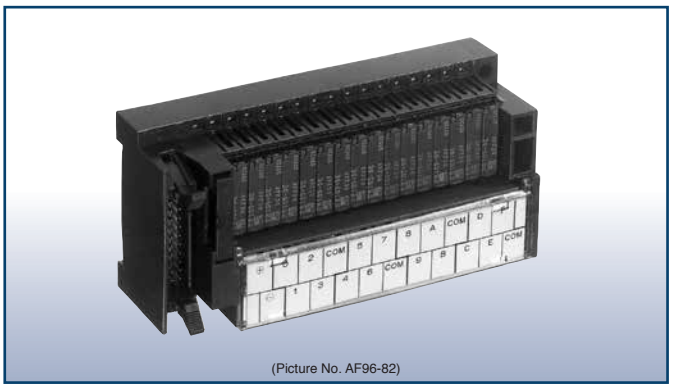
(Picture No. AF96-82)

■Features

- Min. width of 110 mm has been achieved.
  The external dimension is as compact as 110 mm (W) x 52 mm (D) x 37 mm (H).
- Push-set terminal facilitates tightening screws.
  Push-set terminal is used in the terminal section, eliminating the screw tightening time and preventing screws from being lost.
- LED operation indication facilitates I/O ON/OFF operation check.
  Operation indication LED is arranged in 1:1 correspondence with the relay. This makes the ON/OFF relay operation status clear at a glance.
- Two types of relays available for output and input.
- With surge protection diode provided.
- Terminal cover is installed as standard allowing device No. indication.
- With the built-in relay remover
- Used for both DIN rail installation and rear-side screw mounting

■Performance specifications

Item		Performance
Operating duration		10 ms or less
Recovery duration		10 ms or less
Vibration resistance	Malfunction	10 to 55 Hz, Duplex amplitude 1.0 mm
	Durability	10 to 55 Hz, Duplex amplitude 1.0 mm 3 times each in X, Y, and Z directions to total 18 times
Impact resistance	Malfunction	100 m/s²
	Durability	200 m/s² 2 hours each in X, Y, and Z directions to total 6 hours
Operating ambient temperature		-25 to +55˚C (without condensation)
Relative humidity		35 to 85%RH
Terminal screw size		M3
External connection tightening torque		0.5 to 0.7 N·m
Mounting method		Rail mounting (screw mounting also possible)
Applicable round-type crimp-style terminal		R1.25 to 3 (Max.6mm wide)
Connection wire		Max. ϕ1.4
LED indication color		Operating indication: Red, Power indication: Green
Coil surge protection element		Diode
Relay removal count		50 times
Insulation resistance (initial)		100 MΩ or more (with 500 V DC megger)
Voltage resistance	Between contact coils	2000 V AC, 1 minute
	Between contacts with same polarity	1000 V AC, 1 minute
	Between contacts with different polarity	2000 V AC, 1 minute
Weight		Approx. 200g

■Type/model/ordering code

Model (ordering code)	I/O type	No. of points	Rated voltage	Common line handling on connector side.
RS16E-DE04	Input	16 points (1a x 16)	24 V DC	NPN compatible (⊕ common)
RS16-DE04	Output			NPN compatible (⊕ common)
RS16-DE04P				PNP compatible (⊖ common)

■Terminal Relay Application Table

Terminal relay type	RS16E-DE04	RS16-DE04	RS16-DE04P
SPH	**NP1X3206-W**	**NP1Y32T09P1**	**NP1Y32U09P1**
I/O module type	**NP1X6406-W**	**NP1Y64T09P1**	**NP1Y64U09P1**

■Rating

Opening section, connector side (for 1 point RB105)

Item \ Load	RS16 (output) resistor				RS16E (input) resistor	
	Resistance load (cosϕ = 1, L/R = 0 ms)		Inductive load (cosϕ = 0.4, L/R = 7 ms)		Resistance load (cosϕ = 1, L/R = 0 ms)	Inductive load (cosϕ = 0.4, L/R = 7 ms)
Rated load and rated voltage current	220 V AC 2 A	24 V DC 2A	220 V AC 2 A	24 V DC 2A	24 V DC 1A	24 V DC 1A
Rated thermal current	2A *1				1A *2	
Contact resistance	30 mΩ or less				30 mΩ or less	
Min. application load application voltage current (P level reference value)	0.1 V 0.1 mA				0.1 V 0.1 mA	
Electrical lifetime	200 thousand times					
Mechanical lifetime	20 million times	300 thousand times	100 thousand times	60 thousand times	-	

*1 While the used relay (RB105) is a product to use the rated thermal current 5 A, the rated thermal current of the main unit is 2 A because of the terminal relay unit structure.
*2 While the used relay (RB105) is a product to use the rated thermal current 5 A, the rated thermal current of the main unit is 1 A because of the terminal relay unit structure.

Operation coil I/O specifications (for 1 point RB105)

Ambient temperature: 20°C

Rated voltage	Rated current [mA]	Coil resistance [Ω]±10%	Pick-up voltage	Return voltage	Max. allowable voltage	Power consumption [W]	
						Per 1 points	Per 16 points
5 V DC	40	125	70% of rated voltage or less	10% of rated voltage or more	110% of rated voltage	0.2	3.2
24 V DC	8.3	2,880	70% of rated voltage or less	10% of rated voltage or more	110% of rated voltage	0.2	3.2

Note: The current flowing in the LED is about 1 mA. Add each of amperage values for the power capacity calculation.

Internal connection diagram

- **RS16-DE04 (output, NPN compatible product)**
- **RS16-DE04P (output, PNP compatible product)**
- **RS16E-DE04 (input, NPN compatible product)**

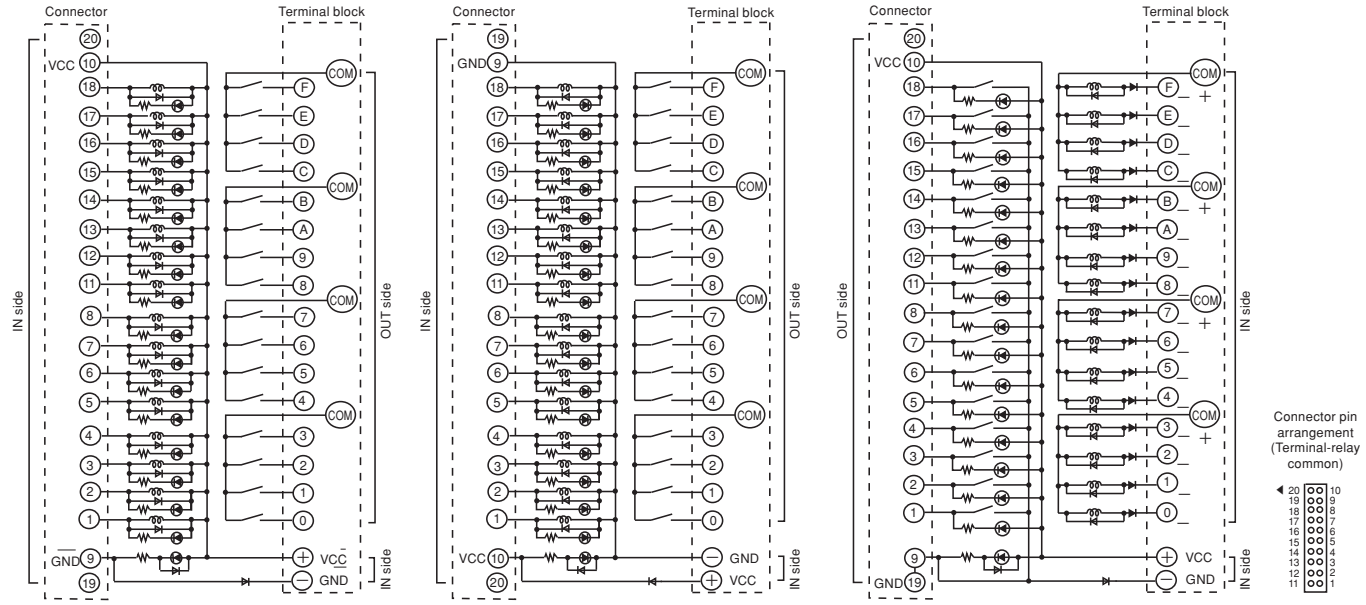

Outline dimensional drawing

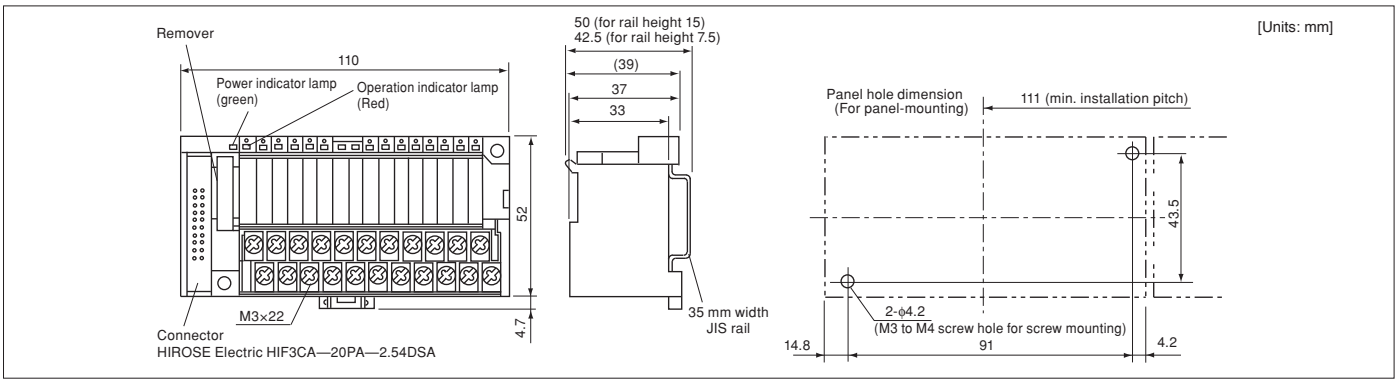

Terminal relay cable

- Type/model/ordering code

Type	Cable length (L)	Model (ordering code)
Cable with connectors (1:2) For MICREX-SX (for input, output)	1,000 mm	**RS910M2-0104**
	2,000 mm	**RS910M2-0204**
	3,000 mm	**RS910M2-0304**

- Cable outline wiring diagram

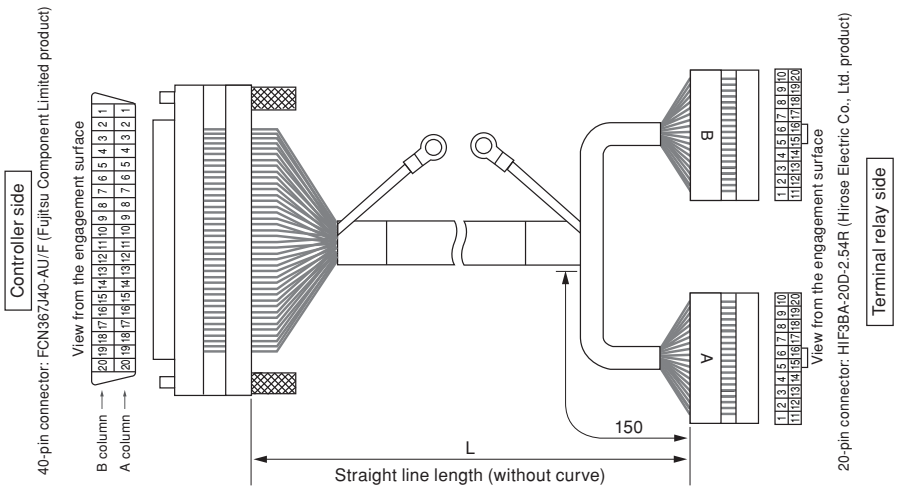

<Wiring>

20 pin (A)	40 pin		20 pin (B)	40 pin
1	A20	I/O signal	1	B20
2	A19		2	B19
3	A18		3	B18
4	A17		4	B17
5	A16		5	B16
6	A15		6	B15
7	A14		7	B14
8	A13	Power supply (-)	8	B13
9	A 1	Power supply (+)	9	A 2
10	B 1		10	B 2
11	A12	I/O signal	11	B12
12	A11		12	B11
13	A10		13	B10
14	A 9		14	B 9
15	A 8		15	B 8
16	A 7		16	B 7
17	A 6		17	B 6
18	A 5	Power supply (-)	18	B 5
19	A 3	Power supply (+)	19	A 4
20	B 3		20	B 4

Web Module: NP1L-WE1

■Features

Through the Internet and intranet, this module realizes equipment supervision by Web browser, e-mail sending at failure occurrence, and remote control and remote maintenance (monitoring/program modification) with the programming support tool.

Versions which support English and Chinese are also available.

NP1L-WE1
(Picture No. KD02-041A)

■Functional specifications

Item	Specifications
Web server functions	Controller data can be monitored and set using a browser (Internet Explorer) on a remote personal computer. Mounts the tabular form data display and trend graph display functions as standard. Initial setup items for the Web modules are all set in the browser screen.
E-main send function	Sends E-mail (contain the attached file) to the specified destination address at occurrence of a set event (failure alarm notification, etc.).
FTP function	Saves trend data and CPU data (binary file) in external FTP server at occurrence of a set event. Saved data can be processed to generate a daily/monthly report or trend graph.
Security function	Limits users and setup operations by user name and password.
Remote loader function	Remote operation of SX support tool (D300win), such as monitoring of SPH sequence, from a personal computer.
PPP function	Realizes the above functions through the modem (telephone and PHS circuit connection service) and mobile arc (Dopa network) on the RS-232C interface.
User contents creation function	Incorporates user-created contents in the Web module.
SNTP function	Controller data can be calibrating the date data (calendar) of the CPU module.

■Performance specifications

Item	Specifications
Ethernet interface	10BASE-T/100BASE-TX, RJ45 modular jack x 1 Auto negotiation
RS-232C interface (For PPP connection)	Max. 115.2 kbps, Dsub 9-pin (male) connector x 1 Character format Data length: 7/8 bits Parity: Even/odd/non settable Stop bits: 1/2 bits Hardware flow control: Provided
No. of units mounted	Max. 4 units/configuration
Internal current consumption	24 V DC, 140 mA or less
Weight	Approx. 140 g

- The following are recommended Ethernet devices:
  For industrial Ethernet devices, made by Phoenix Contact Co., Ltd.
  (Switching hub, repeater hub, category 5 cable, optical fiber cable etc.)

■System configuration

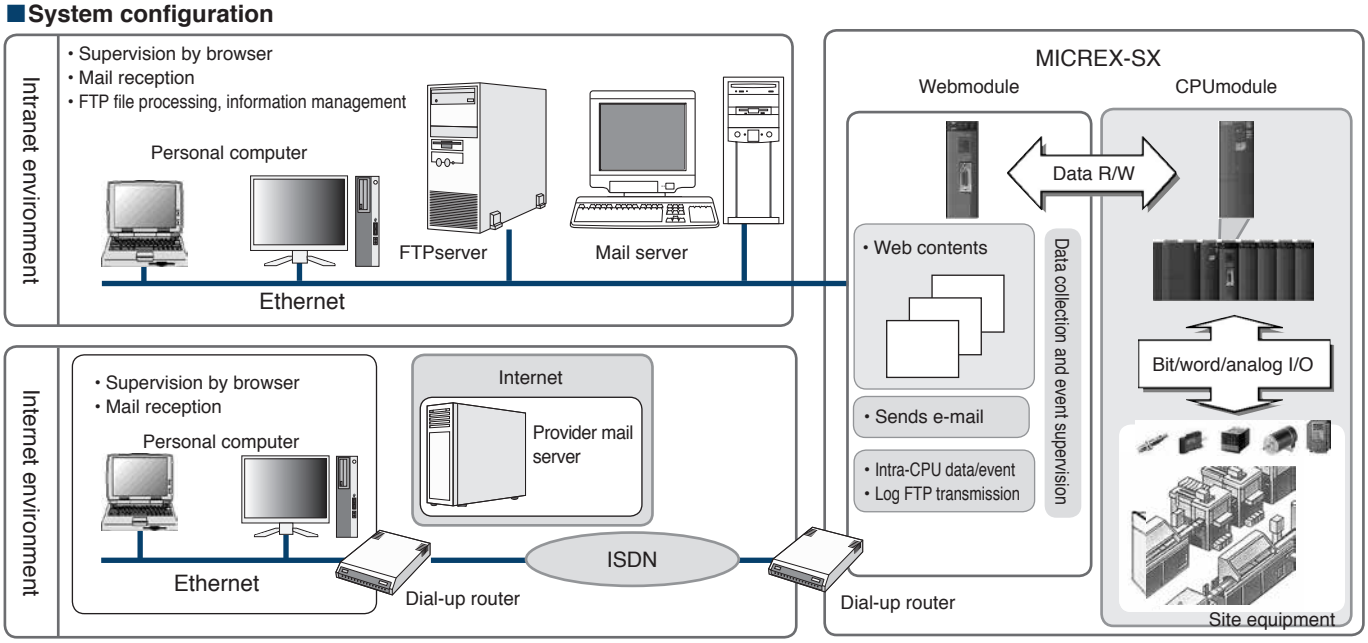

Web Memory Module: NP1L-WS1

■Features

- The Ethernet communication module is equipped with a Web communication function and memory data collection function for the CPU module.
  A long-life, highly reliable system can be constructed, compared with a personal computer OS and hard disk, etc.
- It can collect up to 400 Mbyte of memory data.
- Memory data collection and Ethernet communication with the host device can be achieved without creating any user programs.
- The data collected by this module can be saved into and restored from an SD card (type: NP8PSD-002, sold separately).

NP1L-WS1
(Picture No. KDD15-001)

■Functional specification

Item	Specification
Web server function (configurable with browser)	A Web browser can be used to set up the IP address, collection data memory, collection cycle, and others.
SX CPU memory data collection function	The memory data of the CPU module can be regularly collected into this module. A Web browser can be used to set up the data collection area and cycle.
Data transfer function (FTP client) to host device	The data collected by this module can be regularly transferred to the host device.
Backup function to SD card	It is triggered by the outage detection signal to save the data collected by this module into the SD card, thereby enabling data preservation during outages. Also, the switch operation enables you to save the data collected by this module into the SD card.
Remote loader function	The programming assist tool can be remotely operated through Ethernet. · Upload/download programs · Monitor data in various formats · Failure diagnosis, and others

■Performance specification

Item	Specification
Ethernet interface	10BASE-T/100BASE-TX
Media control	IEEE802.3u
Interface switching method	Automatic negotiation
Connector	RJ45 modular jack type
AUTO MDI/MDI-X	Measures
Transmission protocol	TCP/IP, ICMP, ARP
Internal current consumption	24 V DC, below 80 mA (supplied from the power module via base board)
Weight	Approx. 140 g

■Memory specification

Item	Specification	Remarks
Internal memory capacity for data collection	400 Mbyte (SDRAM)	200 Mbyte x 2 areas
SD card	2 Gbyte	Type sold separately: NP8PSD-002

■System configuration

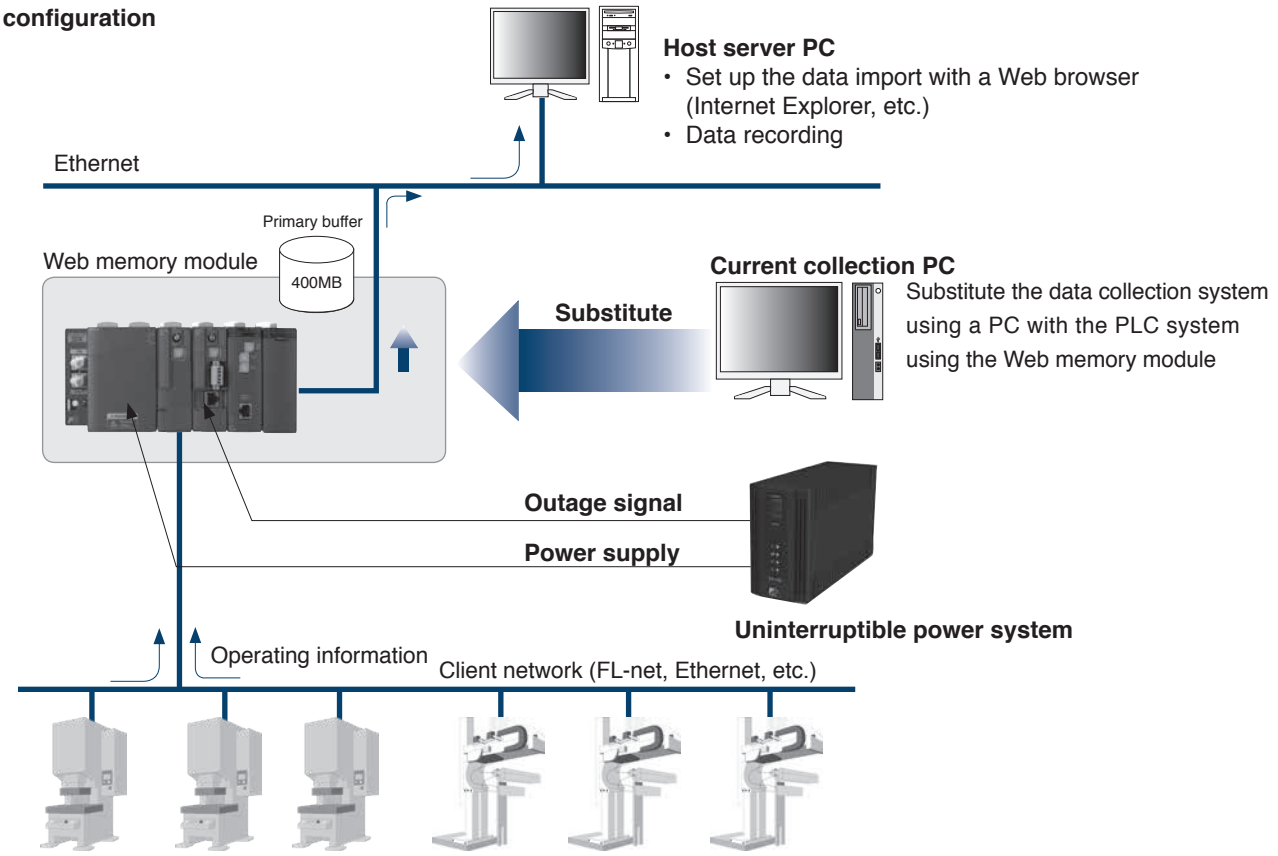

Collect operating information from the control equipment of plant lines, etc.

Ethernet Interface Module: NP1L-ET1

■Features

- Supports the 10BASE-T/100BASE-TX interface.
- Supports three different communication modes.
  - · General purpose communication mode (TCP/IP or UDP/IP protocol communication)
  - · Fixed buffer communication mode (Handshake communication between PC and specific node)
  - · Loader command communication mode (MICREX-SX loader command function)

NP1L-ET1
(Picture No. KD02-040A)

■Performance specifications

Item		Specifications
Model		**NP1L-ET1**
Communication function	Application Communication mode	General purpose communication Fixed buffer communication
	Loader command Communication mode	Communications through Fuji Electric's original communication protocol.
Interface		10BASE-T/100BASE-TX Automatic selection by the auto negotiation function
Media control		IEEE 802.3/IEEE 802.3u
Transmission speed		10 Mbps/100 Mbps
Transmission medium		Twisted pair cable (UTP)
Transmission protocol		TCP/IP, UDP/IP
Max. number of nodes for simultaneous communication		16 stations (ports)
Max. number of transmit words		1017 words
Max. number of loader connections simultaneously		8 units
No. of units mounted		Max. 4 units/configuration
Internal current consumption		24 V DC, 140 mA or less
Weight		Approx. 140 g

- The following are recommended Ethernet devices:
  For industrial Ethernet devices, made by Phoenix Contact Co., Ltd.
  (Switching hub, repeater hub, category 5 cable, optical fiber cable etc.)

■System configuration

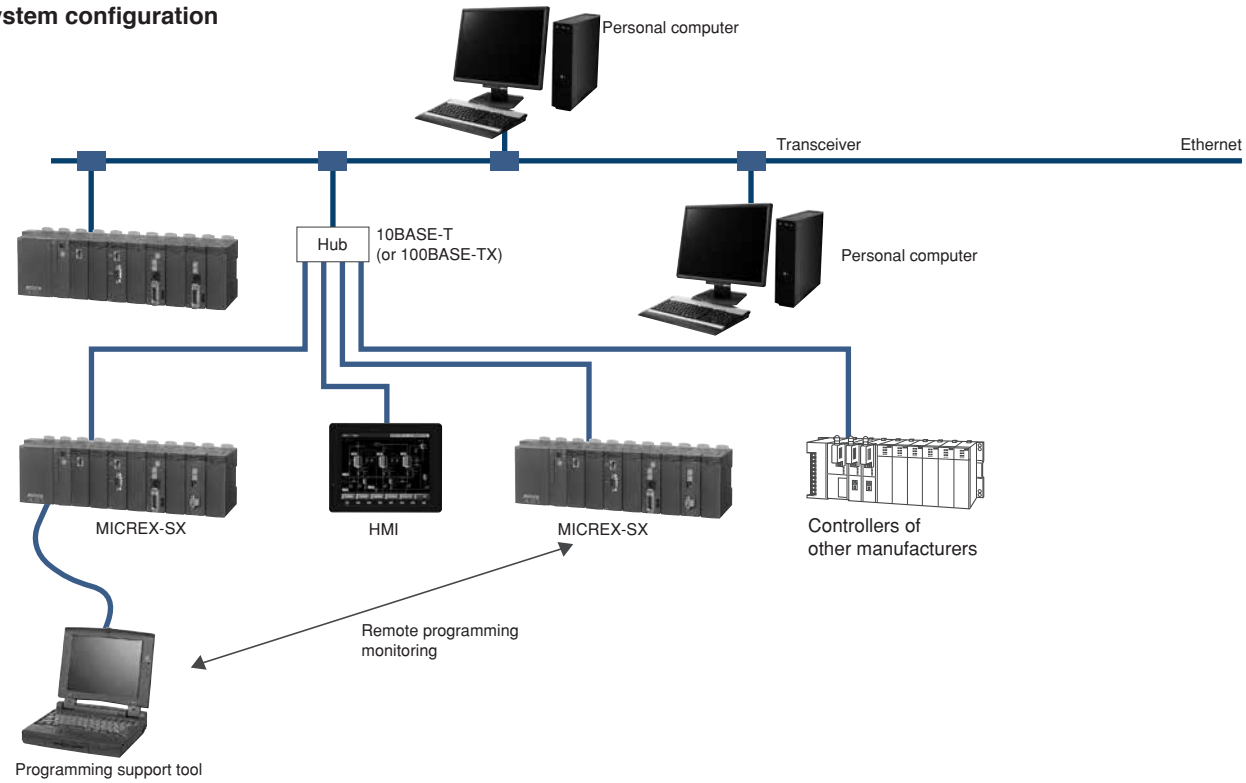

FL-net Ver. 3 (100 Mbps adaption) Module: NP1L-FL3

■Features

- Up to 8 communication modules including P/PE-link can be installed on the base board equipped with CPU. (For SPH200, up to two modules)
- Data exchange between processors
  Cyclic data communication, message communication
- FL-net loader commands supported
- SX system loader functions via network are supported.

NP1L-FL3
(Picture No. KDD05-017)

■Performance specifications

Item	Specifications
Model	**NP1L-FL3**
Transmission specifications	10BASE-T / 100BASE-TX
No. of SX bus connectable modules	Max. 8 units/configuration (including P/PE-link)
Max. number of system nodes	254 units (2 units / segment, including HUB)
Transmission line form	Bus configuration (multi-drop)
Framing method	Ethernet II
Access control	CSMA/CD
Transmission system (code)	Base band (Manchester coding)
Transmission speed	10 Mbps/100 Mbps
Max. segment length	100 m: between node and HUB (Max. 200 m with repeater)
Protocol	FA link protocol, UDP/IP, ICMP, ARP
IP address	Class C
Data exchange method	· Cyclic broadcast transmission method · Data size: Max. 8.5 Kwords · Message transmission type · Data size: Max. 512 words
Host interface	Common memory cyclic refresh method, block data read / write
Internal current consumption	24 V DC, 160 mA or less
Weight	Approx. 220 g

- The following are recommended Ethernet devices:
  For industrial Ethernet devices, made by Phoenix Contact Co., Ltd.
  (Switching hub, repeater hub, category 5 cable, optical fiber cable etc.)

■System configuration

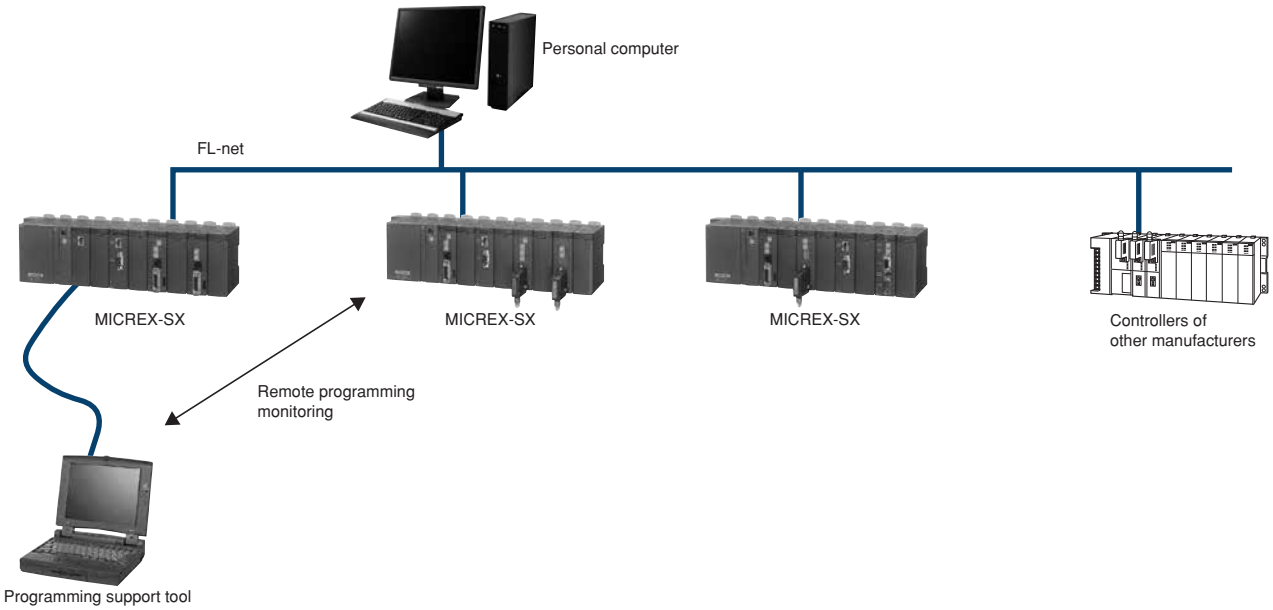

LONWORKS Interface Module: NP1L-LW1

■Features

- Uses the communication extension FB compatible with the LONWORKS network, making it easier to transfer and receive MICREX-SX application data to/from other LONWORKS nodes.
- Max. number of NVs: 300, number of CPs: up to 200 intelligent nodes can be configured.
- Up to two units can be mounted in a single system (configuration).

NP1L-LW1
(Picture No. AF00-197A)

■Specifications

Item	Specifications	Remarks
Applicable standards	LonTalk (EIA-709.1), LonMark	
Transmission speed	78 kbps	
Transmission distance	2200 m (Bus connection) 500 m (Free-topology connection)	
No. of node connections	64 units	No. of node connections in the same segment
Transceiver	FTT-10A	
Control LSI	TMPN3120	Application programs operate on SPH.
No. of SX bus connectable modules	Max. 2 units/configuration	Can be used through connection to two LonWorks networks.
Max. number of NVs	300	Depends on the definition.
Max. number of CPs	200	Depends on the definition.
Total data size of NV+CP	8 Kwords + 128 words	
I/O area size	128 words	Used for NV and CP.
Memory area size	Any size x 4 blocks, a total of 8 Kwords or less	Used for NV and CP.
No. of address entries	15 fixed	No. of nodes for NVo variable binding
No. of domain table entries	2 fixed	
Internal current consumption	24 V DC, 140 mA or less	
Weight	Approx. 200 g	

■System configuration

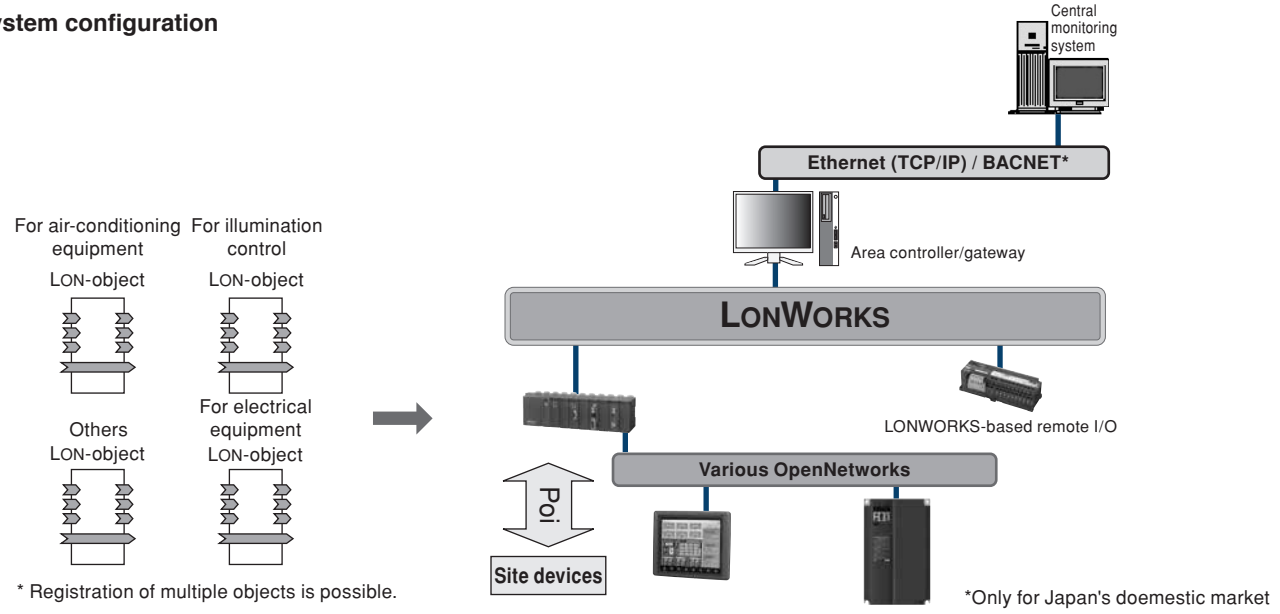

LonWorks Interface Module Support tool

- This support tool can be downloaded from our website at no charge.
- Usually communications through the LONWORKS network require the network variables to be defined with a dedicated tool which supports the LONWORKS network (programming with neuron C language).
- SLDEF makes it possible to define these variables with an ACCESS file without knowledge of the neuron C language.
- The information (SXD files) defined by SLDEF are downloaded from programming support tool Expert (D300win) to the LONWORKS module.
- Since the node object definition specified by LonMark is offered as FB, LONWORKS control can be defined by PLC programming.

P-link Module : NP1L-PL1
PE-link Module : NP1L-PE1

■Features

- Up to eight P/PE-link modules can be installed in a single system configuration. (For SPH200, up to two modules)
- N:N communications in the token passing method
- Data exchange between processors
  Broadcast communication, message communication
- User program upload/download and processor start/stop are possible from the host computer.
- Remote programming for other processor is possible via the P/PE-link.

NP1L-PL1
(Picture No. AF98-133)

■Performance specifications

Item	Specifications	
Model	**NP1L-PL1 (P link)**	**NP1L-PE1 (PE link)**
No. of SX bus connectable modules	Max. 8 units/configuration	
No. of P/PE links	Max. 16 units	Max. 64 units
Transmission line form	Bus configuration (multi-drop)	
Transmission line	Coaxial cable Total length: Max. 250m	Coaxial cable Total length: Max. 500 m
Transmission system	Half-duplex serial communication method	
Data exchange method	N:N (token passing) method, memory refresh method	
Transmission speed	5 Mbps	
Data transfer	Broadcast communication, message communication	
Cable specifications	Coaxial cable /5C-2V (conforming to JIS C3501)	
Internal current consumption	24 V DC, 160 mA or less	
Weight	Approx. 235 g (module), approx. 40 g (P/PE-link connector)	

■System configuration

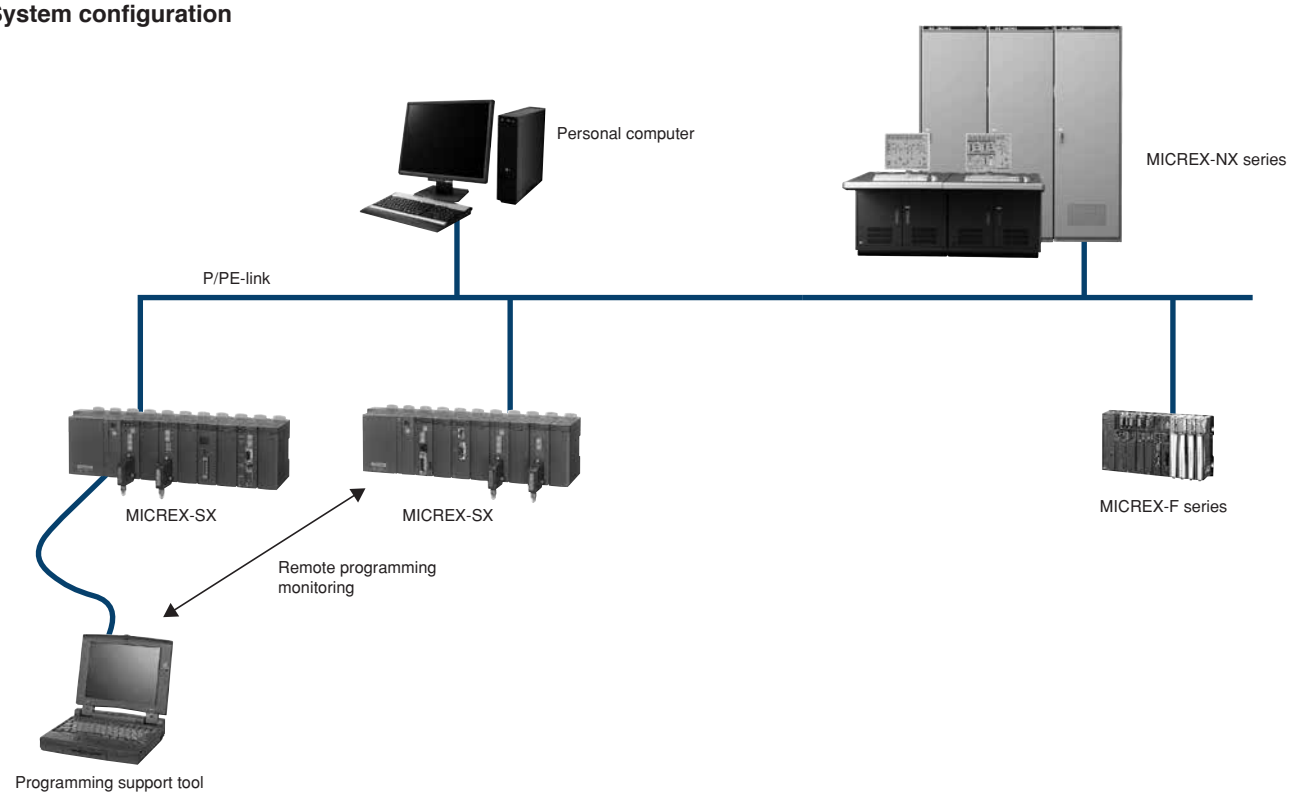

LE-net Module : NP1L-LE1
LE-net Loop2 Module : NP1L-LL2

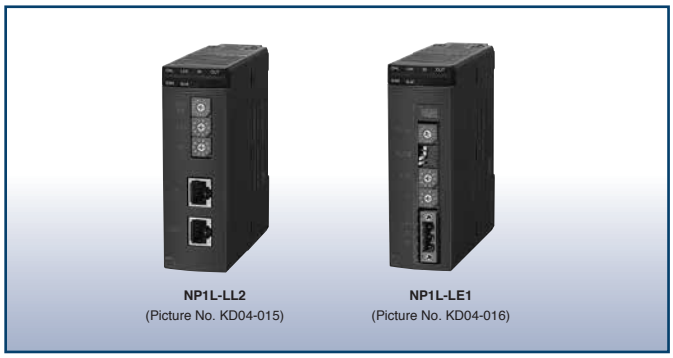

■Features

- Up to eight LE-net modules can be installed in a single system configuration. (For SPH200, up to two modules)
- LE-net is an original network of Fuji Electric. It is a low-priced link module between processors to conduct communication with other nodes connected to the LE-net.
- Broadcast communication and message communication can be conducted.
- The LE-net can be connected either as a multi-drop network or a single loop redundant wiring network.
- If the transmission line is broken, a transmission error occurs in a multi-drop network, but in a loop network, data communication between nodes can continue. This enables construction of a highly reliable system at a relatively low cost.
- It is possible for the loop-2 module to make the LE-net modules redundant by using the redundancy maintenance FB. The single configuration and the redundant configuration can coexist within a loop.

Note: Multi-drop networks, loop-2 networks cannot be connected with each other because each network uses a different transmission protocol. To connect them together, the transmission method must be unified.

■Performance specifications

Item	LE-net module	Loop-2 module
Model	**NP1L-LE1**	**NP1L-LL2**
No. of node connections	Max. 64 units	
Connection node number	0 to 63	
Connection distance	800 m/62.5 kbps	Total extension: 500 m, between nodes: 100 m
Transmission speed	500 m/125 kbps 250 m/250 kbps 100 m/500 kbps 40 m/Mbps	5 Mbps
Transmission medium	Shielded twisted pair cable (T-link cable recommended)	Shielded twisted pair cable, category-5 cross cable
Transmission line format	Multi drop	Single loop redundant wiring
Transmission system	Half-duplex, destination arrival receiving method on both sides	
Communication protocol	N:N time slot data exchange communication (broadcast) 1:1 message communication	
User data Frame size	Time slot frame: up to 96 bytes/node Message frame: up to 122 bytes	Time slot frame: up to 1536 bytes/node Message frame: up to 490 bytes
No. of connectable support units	Up to 2 units simultaneously, including those connected directly or remotely	
Hardware redundancy	—	Provided
Weight	Approx. 130 g (no connector)	Approx. 140 g

■System configuration

- LE-net module

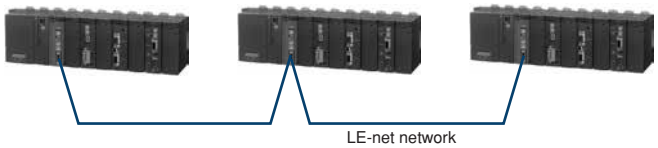

- LE-net loop2 module

(1) Basic system

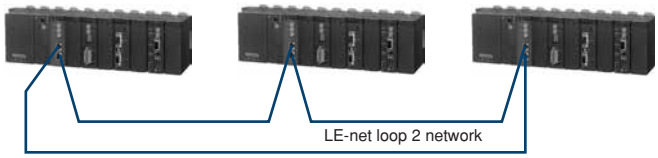

(2) Duplex system

LE-net modules within the same baseboard can be made redundant by using the duplex maintenance FB. The single configuration and the redundant configuration can coexist within a loop.

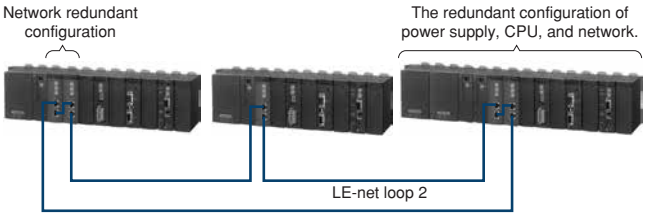

General Purpose Communication Module: NP1L-RS□

NP1L-RS1
(Picture No. AF01-93)

■Features

- Can be combined with an extension FB for communications with diverse equipment without creating any communication control program.
- Communication port can be used as the loader connection port, which is effective in debugging from the SX bus expansion side installed at a distance.

■Performance specifications

- Communication port type by module type

Model	NP1L-RS1	NP1L-RS2	NP1L-RS3	NP1L-RS4	NP1L-RS5
Communication port	RS-232C x 1 channel RS-485 x 1 channels	RS-232C x 1 channel	RS-232C x 2 channels	RS-485 x 1 channel	RS-485 x 2 channels

- Communication port specifications

Item	Specifications		
Port	RS-232C	RS-485	
No. of SX bus connectable modules	Max. 16 units/configuration		
Transmission system	Half-duplex /serial communication method*1		
Synchronization method	Start-stop synchronous transmission		
Transmission speed	300/600/1,200/2,400/4,800/9,600/19,200/38,400/57,600/76,800/115,200 bps (115,200 bps or less in total of 2 channels) *2		
Transmission distance	15 m or less	1 km or less (transmission speed : 19,200 bps or less)	
No. of connectable modules	1:1 (including one external device)	1:N (Max. 31)	
Connection method	D-sub, 9-pin connector (female)*3	D-sub, 9-pin connector (male)*3	Screw terminal block (M3) 20 poles (NP1L-RS5)
Transmission method	Depends on the application program (Expansion FB) in the CPU module		
Internal current consumption (24 V DC)	NP1L-RS1: 110 mA or less, NP1L-RS2: 90 mA or less, NP1L-RS3: 110 mA or less, NP1L-RS4: 80 mA or less, NP1L-RS5: 110 mA or less		
Weight	NP1L-RS1: Approx. 170 g, NP1L-RS2: Approx. 160 g, NP1L-RS3: Approx. 140 g, NP1L-RS4: Approx. 160 g, NP1L-RS5: Approx. 190 g		

*1 The use of the non-procedure FB allows full-duplex communication on applications.
*2 For transmission speeds of 300, 600, 76800, and 115200 bps, use FBs corresponding to the transmission speed.
*3 Connector fixing screws are mounted using metric screws (M2.6). Products using imperial screws are also available. Please contact our sales office for details (type ends with Z607).

■System configuration

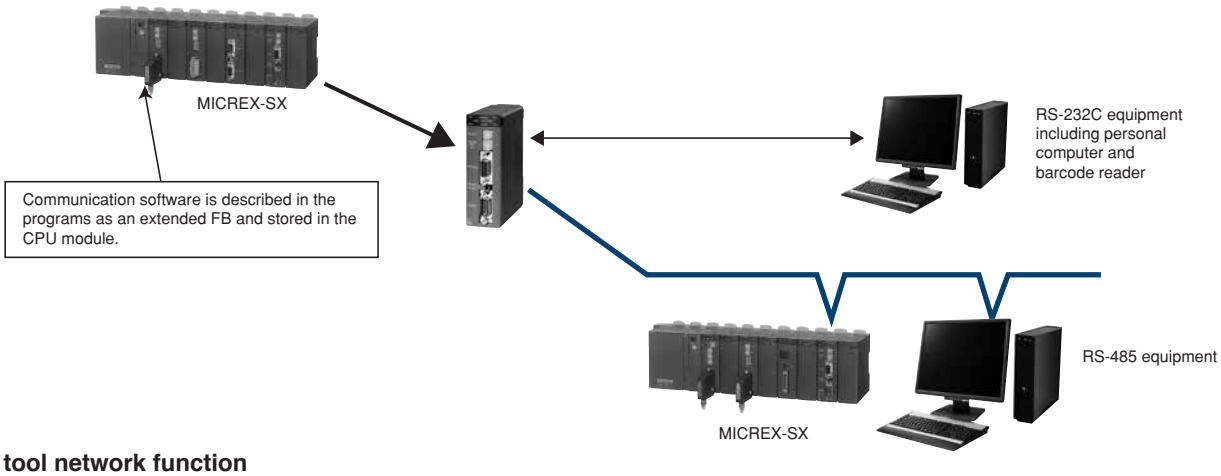

■Support tool network function

Use of general-purpose communication modules makes it possible for multiple systems to be supported with one unit of personal computer loader or to remotely support the system via a modem.

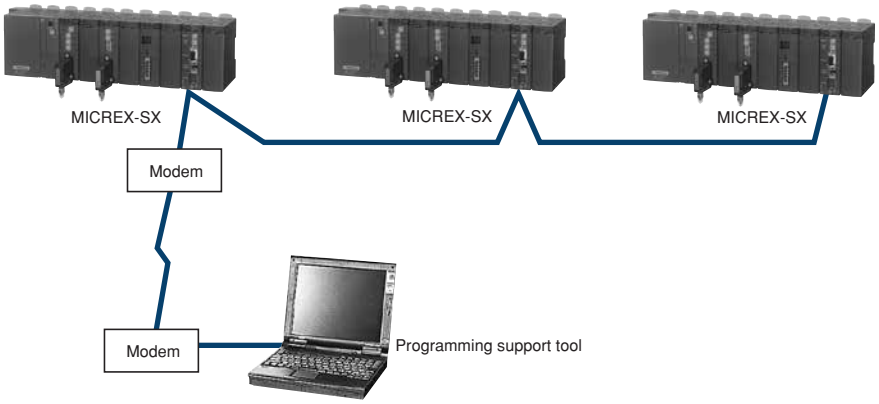

■RS-232C cable selection

Select an appropriate RS-232C cable according to the following specifications for both the PLC and external device.

- RS-232C connector specifications (connector shape, number of pins, male or female connector, metric or imperial connector fixing screws)
- RS-232C connector pin assignment

The connector specifications and pin assignment for the PLC are shown below. For more information on cable selection, refer to Appendix 8 of the user's manual for the general purpose communications module (Manual No. FEH225j or newer versions of the manual).

[Connector specifications]
D-sub 9-pin, female (use male on cable side connector), metric screws (M2.6)
*Commercially available cables with a D-sub9 pin connector usually make use of imperial screws, so it is necessary to replace the imperial screws with metric screws (M2.6).

[Connector pin assignment]

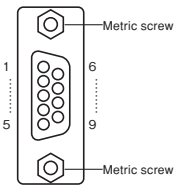

Pin No.	Signal name	Signal direction PLC ←→ external device	Description
1	CD	←	Carrier detect
2	RD	←	Receive data
3	SD	→	Send data
4	ER	→	Data terminal ready
5	SG		Signal ground (common return)
6	DR	←	Data set ready
7	RS	→	Request to send
8	CS	←	Clear to send
9	RI	←	Call indication

General Purpose Communication FB Software for FA Equipment

Various communication protocols are available by combining the software with general purpose communication modules and storing the extended FB in the CPU module.
This FB software can be downloaded from our website at no charge.

■Communication extension FB list

Package category	Extension FB type	Relevant equipment	Extension FB name
Standard extension FB	No procedure	FB which enables application programs to execute non-procedural communication protocols.	_C_free _Cfr252 _Cfr128 _Cfr64 _Cfr32 _Cfrpr (built-in protocol) _Cfrp2 (built-in protocol)
	Temperature controller communication procedure	Fuji Electric Co.: PYX, PYH	_CfdPYX
	Inverter communication procedure	Fuji Electric Co.: FRENIC5000 For FVR-C11 (FGI-BUS) For FVR-C11 (FGI-BUS) (Reduction of communication processing program size)	_CfdFRN _CfdFVR _Cfvrpr
	MODBUS procedure	MICREX-SX works as a master station and communicates with MODBUS slave stations.	_C_modm
	MODBUS Ethernet (TCP/IP) Communication FB	For MODBUS Ethernet master stations For MODBUS Ethernet slave stations	_C_emodm _C_emods
For FA equipment General-purpose communication FB	Temperature controller procedure	RKC INSTRUMENT INC.: REX-F, REX-D, FAREX-SR series	_CrkREX
		OMRON Corporation: Digital temperature controller E5AX, E5XJ series	_ComAX
		OMRON Corporation: Digital temperature controller E5CK series	_ComCK
		Yamatake-Honeywell Co.: Digitronik temperature controller SDC40A/40G series	_CymSDC
	ID system procedure	OMRON Corporation: V600 series, V700 series	_ComV6, _ComV7
		Sharp Corporation: Microwave ID plate system DS series	_CshDS
		Yamatake-Honeywell Co.: Code recognition ID system WAM120 series	_CymWAM
		Idec Izumi Corp.: Data carrier system FP1A series	_CizFP
	Bar code reader procedure	TOHKEN CO.: CD8200/8500, TLMS-3200RV series	_CtkTCD
		Nippon Electric Industry Co.: BCC2600 series	_CndBCC
		Keyence Corp.: BL180, BL500, BL700 series	_CkyBL
		IZUMI DATALOGIC CO.: Bar code reader DS series	_CizDS
	SECS procedure	SECS-procedure semiconductor manufacturing equipment (Support: SECS- I only)	_C_SECS
	NC procedure	Fanuc Ltd.: FANUC Series 18i	_CDNC2
	Serial printer procedure	NEC Corporation: PC-PR201 series	_C_print

OPCN-1 Master Module : NP1L-JP1
OPCN-1 Slave Module : NP1L-JS1
OPCN-1 Interface Module : NP1L-RJ1

NP1L-JP1
(Picture No. AF97-522)

■Features

NP1L-JP1
- Up to eight units can be connected in a single system configuration.
- Up to 31 slave stations can be connected to a single master unit.
- Number of I/O points is a max. of 8192 points (512 words) For SPH200, up to 2048 points (128 words)
- The transmission speed can be switched. (1 M/500 k/250 k/125 kbps)

NP1L-JS1
- I/O data link through the OPCN-1 is possible between CPUs.
- Number of I/O points is a max. of 2048 points (128 words)

NP1L-RJ1
- Slave station configuration, conforming to the OPCN-1 Standard, implements compact, economical, centralized remote I/O as a multi-vendor network.
- Input filtering time of the input module can be set with DIP switch on the front.

■Communication specifications

Item	Specifications		
Model	**NP1L-JP1**	**NP1L-JS1**	**NP1L-RJ1**
Applicable class	TYPE-M51 I		TYPE-S51 I
No. of SX bus connectable modules	Max. 8 units/configuration		—
No. of connectable slaves	31 units/master module	—	
Station number setting range	00 fixed	01 to 7F	
Transmission line form	Bus configuration (multi-drop)		
Transmission line	Shielded twisted pair cable		
Transmission system	Half-duplex serial transmission, based on EIA RS-485		
Transmission speed (Max. total length) *1	125 kbps (1000 m)/ 250 kbps (800 m)/ 500 kbps (480 m)/ 1 Mbps (240 m)		
Encoding method	NRZI (Non Return to Zero Inverted)		
Error check	ECS ($X^{16} + X^{12} + X^5 + 1$) and retry		
Communication function	• Initial setting service • I/O service • Reset service • JEM-TR192 service (data read/write service)	• Initial setting service • I/O service • Reset service • Simultaneous broadcast service	
No. of I/O points	Normal mode: Max. 2032 points (127 words) Extension mode or I/O Extension mode: Max. 8192 points (512 words)	Maximum input: 64 word/slave, maximum output: 64 word/slave	
No. of message points	Max. length per transmission: 250 bytes (data section for the data read/write service)	—	
Internal current consumption	24 V DC, 130 mA or less		
Weight	Approx. 200 g (module), approx. 40 g (OPCN-1 connector)		

*1 The transmission distance applies to T-KPEV-SB 1.25 mm² from Furukawa Electric Co. Note that the distance may vary depending on the cable characteristics.

■System configuration

● OPCN-1 slave system

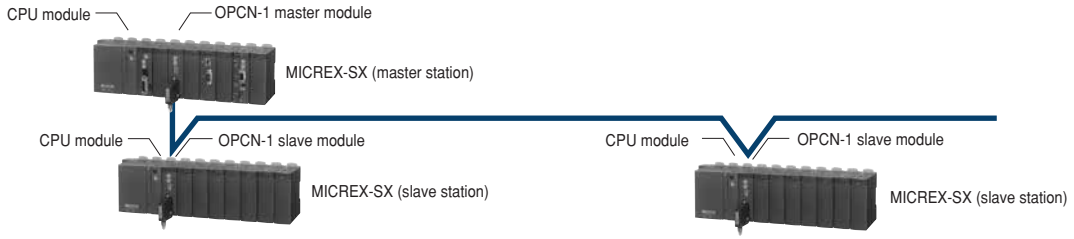

● OPCN-1 remote I/O system

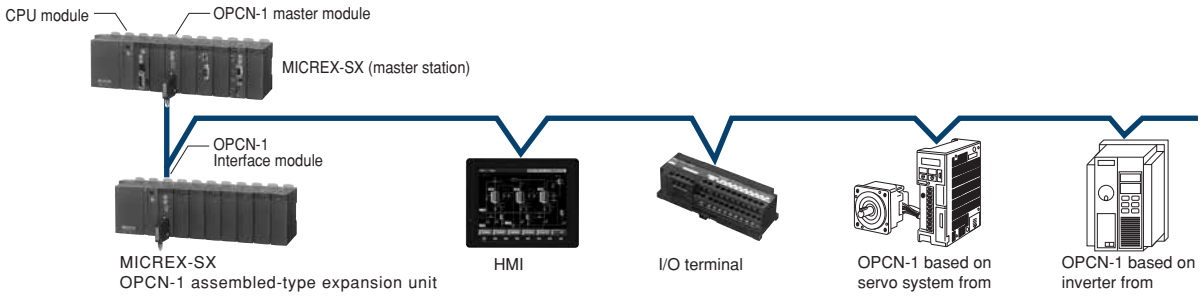

Communication Module

DeviceNet Master Module : NP1L-DN1
DeviceNet Slave Module : NP1L-DS1
DeviceNet Interface Module : NP1L-RD1

NP1L-DN1
(Picture No. AF99-340)

■Features

NP1L-DN1

- Up to eight units can be connected in a single system configuration.
- Up to 63 units of remote I/O equipment can be connected to a single master unit.
- Number of I/O points is a max. of 8192 points (512 words)
  For SPH200, up to 2048 points (128 words)
- The transmission speed can be switched.
  125 kbps (500 m)/250 kbps (250 m)/500 kbps(100 m)

NP1L-DS1

- I/O data link through the DeviceNet is possible between CPUs.
- Number of I/O points is a max. of 2048 points (128 words)

NP1L-RD1

- Realizes small, economic collective remote I/O as a DeviceNet slave station.

■Communication specifications

Item	Specifications		
Model	**NP1L-DN1**	**NP1L-DS1**	**NP1L-RD1**
No. of SX bus connectable modules	Max. 8 units/configuration		—
No. of remote I/O stations	63/master module	—	
MAC ID setting range	00 to 63		
Transmission line form	Bus configuration (multi-drop), tree-structure, branch-structure		
Transmission line	Trunk (thick cable), drop (thin cable)		
Transmission system	Half-duplex serial communication method		
Transmission speed (distance)	125 kbps (500 m)/ 250 kbps (250 m)/ 500 kbps(100 m)		
Media access control	CSMA/NBA		
Modulation	Base band		
Encoding method	Non-zero recovery using the bit stuff function NRZ (Non Return to Zero)		
Error check	FCS (Frame Check Sequence CRC-16)		
Communication function	I/O message · Poll command/response · Bit-Strobe command/response · Change of state/Cyclic ACK not provided · Change of state/Cyclic ACK provided Explicit message (Implements the client/server function to set and diagnose remote I/O stations. Low priority communication traffic.)	Poll command/response Explicit message	
Vendor ID	319 (Fuji Electric Co., Ltd.)		
Device type	Communication Adapter (Code: 0×0C)		
No. of I/O points	Normal mode: Max. 2048 points (128 words) Extension mode or I/O Extension mode: Max. 8192 points (512 words)	Max. 2048 points (128 words) /1 slave	
No. of message points	Max. length 492 bytes per transmission (Explicit message)		
Network current consumption	24 V DC, 45 mA or less (supplied from DeviceNet power supply)		
Internal current consumption	24 V DC, 90 mA or less		
Weight	Approx. 170 g		

■System configuration

● DeviceNet slave system

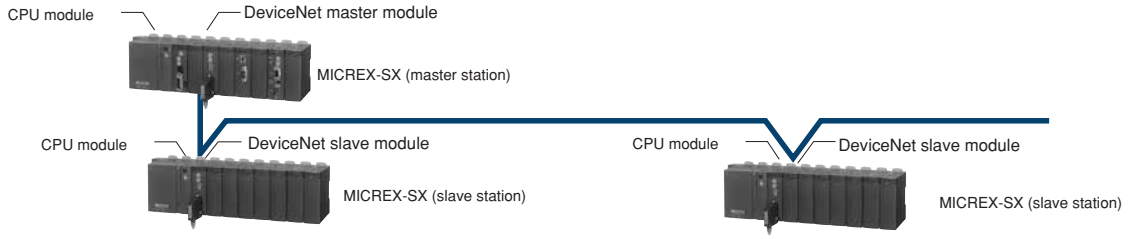

● DeviceNet remote I/O system

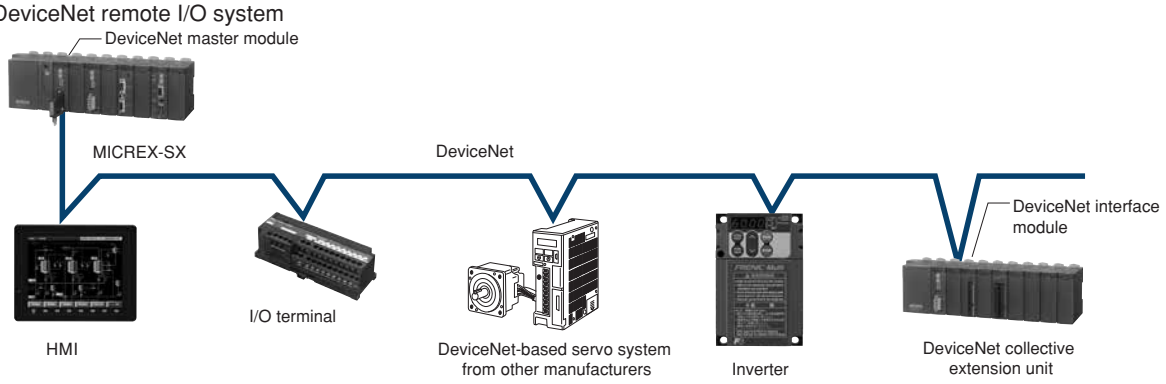

T-link Master Module : NP1L-TL1
T-link Slave Module : NP1L-TS1
T-link Interface Module : NP1L-RT1

■Features

NP1L-TL1

- Up to eight units can be connected in a single system configuration.
- Up to 64 units of slave equipment can be connected to a single master unit.
- Number of I/O points is a max. of 8192 points (512 words) For SPH200, up to 2048 points (128 words)
- T-link equipment for such as MICREX-F and FLEX-PC can be used. (Some types excluded.)

NP1L-TS1

- Data link by I/O data between CPUs through T-link is possible.
- Five different numbers of I/O points (1 word/1 word, 2 words/2 words, 4 words/4 words, 8 words/8 words, 32 words/32 words) can be selected according to application.

NP1L-TL1
(Picture No. AF98-132)

NP1L-RT1

- Realizes small, economic collective remote I/O as a T-link slave station.

■Communication specifications

Item	Specifications		
Model	**NP1L-TL1**	**NP1L-TS1**	**NP1L-RT1*3**
No. of SX bus connectable modules	Max. 8 units/configuration		-
No. of connectable slaves	32 units/master module*2	-	
Transmission line form	Bus configuration (multi-drop)		
Transmission speed (Max. total length)*1	Bus transmission line: Shielded twist pair cable Maximum total length: 1000 m Optical transmission line: Quartz GI cable, multicomponent SI cable) (Optical connector FNC120/130 is needed for the optical transmission line)		
Transmission system	Half-duplex serial communication method		
Data exchange method	1:N (polling/selecting) method		
Transmission speed	500 kbps		
Error check	FCS($X^{16}+X^{12}+X^{5}+1$)		
No. of I/O points	Normal mode: Max. 2048 points (128 words) Extension mode or I/O Extension mode: Max. 8192 points (512 words)		
No. of message points	Max. length per transmission: 220 bytes		
Internal current consumption	24 V DC, 140 mA or less		
Weight	Approx. 200 g (module), approx. 40 g (T-link connector)		

*1 The transmission distance applies to T-KPEV-SB 1.25 mm² from Furukawa Electric Co.
Note that the distance may vary depending on the cable characteristics.
*2 Up to 64 units can be connected as slaves when using the T link electric repeater.
*3 The following I/O modules cannot be installed on the NP1L-RT1 base. NP1X3206-A, NP1Y32T09P1-A, NP1AX08-MR, NP1AX08V-MR, NP1AX08I-MR

■System configuration

●T-link slave system

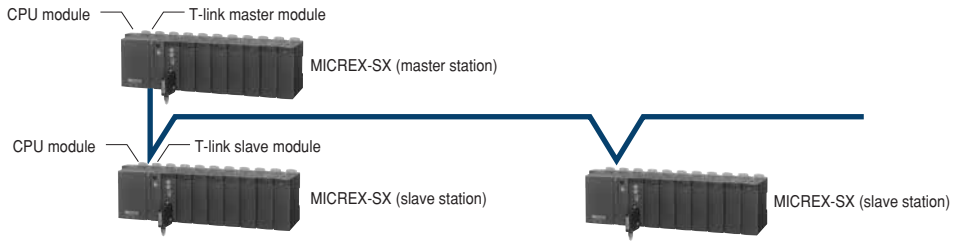

●T-link remote I/O system

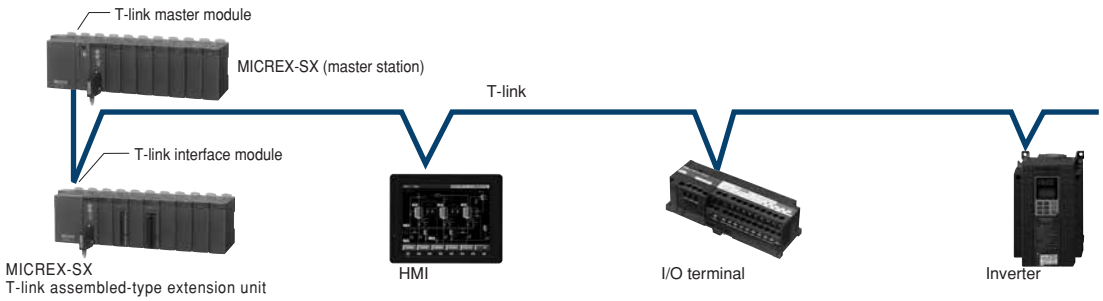

Communication Module

PROFIBUS-DP Master Module : NP1L-PD2
PROFIBUS-DP Slave Module : NP1L-PS1
PROFIBUS-DP Interface Module : NP1L-RP1

■Features

NP1L-PD2

- Open system
  Diverse slave products of PROFIBUS-DP can be connected. As for the DP slave, the compatibility authenticated by the PROFIBUS association has been confirmed. (The number of vendors exceeds 300.)
- Flexible system configuration
  In addition to the basic configuration consisting of one DP master and multiple DP slaves, combinations with multiple DP masters and multiple DP slaves are possible, making it easier to distribute master functions.
  Max. number of unit connections (including master stations) is 126. With 33 units or more, repeaters are required.
- Transmission speed
  Can be selected from nine options:
  9.6/19.2/93.75/187.5/500/1500/ 3000/6000/12000 kbps.
  (The upper limit depends on the type of the DP slave.)

NP1L-PD2
(Picture No. KD02-038A)

NP1L-PS1/RP1
(Picture No. KD03-023)

NP1L-RP1

- This communication module realizes collective remote I/O as a PROFIBUS-DP slave station.

NP1L-PS1

- I/O data link through the PROFIBUS-DP is possible between CPUs.
- A max. of 128 words can be controlled as an input/output total of I/O points.

■Performance specifications

Item	Specifications		
Model	**NP1L-PD2**	**NP1L-PS1**	**NP1L-RP1**
No. of SX bus connectable modules	Max. 8 units/configuration		-
Applicable standards	IEC 66158, EN 50170, DIN 19245		
Communication function	PROFIBUS-DP master (DPM1) function	PROFIBUS-DP slave function	
No. of slave station connections	Up to 32 units (up to 126 units with repeaters)	-	
Station No. (station address) setup range	0 to 125	0 to 99	
Transmission line form	Bus configuration (multi-drop)		
Communication standard	Applicable to EN 50170 and DIN 19245		
Data exchange method	1:N (polling/selecting) method		
Transmission speed	9.6, 19.2, 93.75, 187.5, 500, 1,500, 3,000, 6,000, 12,000 (kbps)		
Transmission distance	1,200 m at the transmission speed of 9.6 bps; 100 m at the transmission speed of 12 Mbps (See the table below.)		

Baud rate (kbps)	9.6	19.2	93.75	187.5	500	1,500	3,000	6,000	12,000
Distance/segment	1,200 m	1,200 m	1,200 m	1,000 m	400 m	200 m	100 m	100 m	100 m

Cable	PROFIBUS-DP cable (Shielded twist pair cable)	
No. of I/O points	Normal mode: Max. 2048 points (128 words) *1 Extension mode or I/O extension mode: Max. 8160 points (510 words)	In total I/O: Max. 128 words (Each I/O: Max. 122 words)
Internal current consumption	24 V DC, 200 mA or less	24 V DC, 150 mA or less
Weight	Approx. 250 g	Approx. 180 g

*1 SPH200 supports standard mode only.

■System configuration

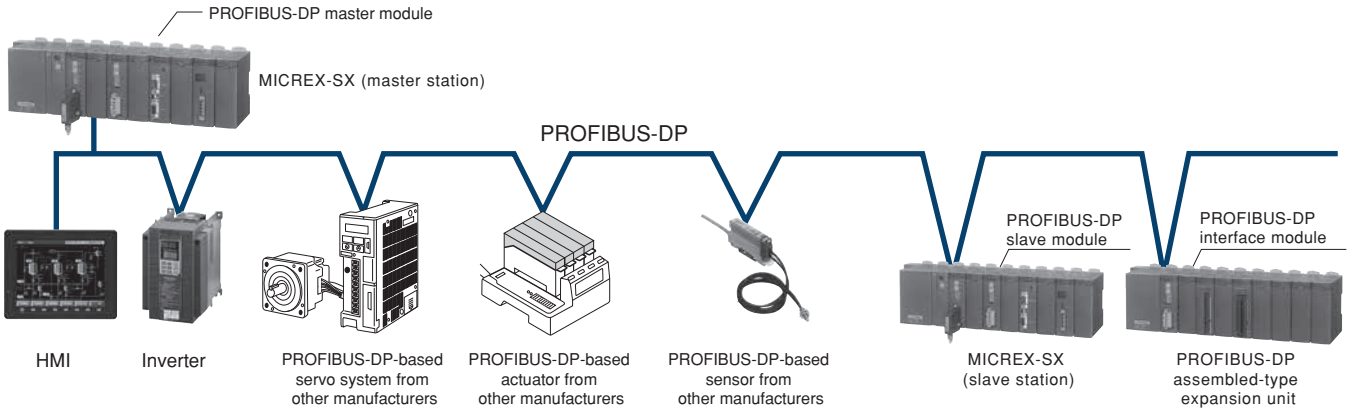

■Configurator Software: Net Tool For Profibus

Used to download the system configuration information to the PROFIBUS-DP master module. Required to update the initial setup or system configuration.

■Please purchase from:

HMS INDUSTRIAL NETWORKS
☎ +81-45-478-5340

M-NET Communication Module: NP1L-MN1

■Features

- The module is available as a master or slave station by switching the station No.
- Up to seven child stations can be connected.
- A terminating resistor is built-in.

■Specification

Item	Description
Number of channels	1 channel
Main functions	Parent/child station
Transmission information	256
Transmission speed	Normally connected with seven stations with 256 points: up to 100 ms per cycle
Form of connection	1:N (N: up to 7)
Signal level	EIA standard: RS-422
Communication method	Half-duplex system
Synchronization method	Asynchronous (async)
Communication speed	19.2 kbps/57.6 kbps
Transmission distance	Up to 100 m
Weight	Approx. 175 g (no connector)

■System configuration

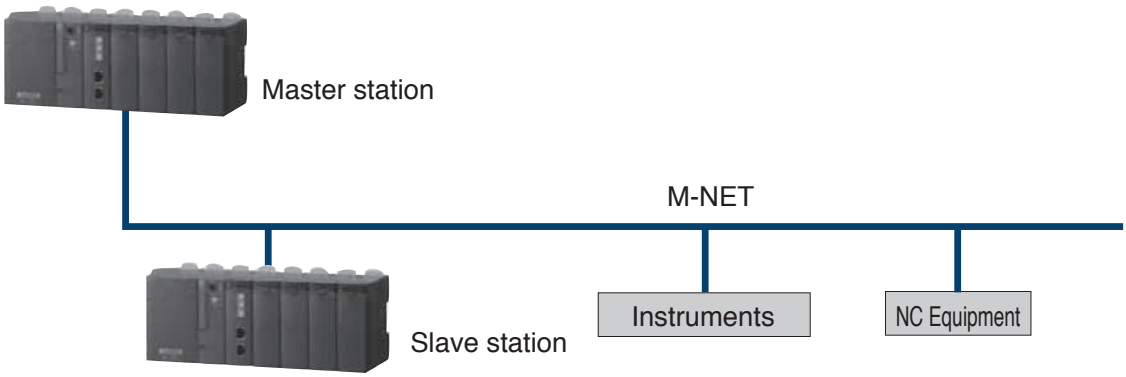

I/O Terminal : NR1 Series

Compact type I/O terminal applicable to diverse field networks with a common frame size.

NR1 series
(Picture No. AF00-187)

■Features

- Compatible with diverse device level networks
  Device level network which performs high-speed communication of I/O information and messages between a programmable controller, a personal computer, and other controllers and an inverter, a servo, and MMI device, and other FA devices, among diverse networks consisting of an FA system, ranging from the computer level to the bit level. The I/O terminal corresponds to open device level networks (OPCN-1, LonWorks) and Fuji Electric's original networks (T-link, SX bus).
- Easy maintenance
  Since removable terminal blocks are used as the terminal blocks for the communication section, power supply, and I/O, the main unit can be attached and removed easily.
- Preventing mis-wiring
  Uses different colors for the surface sheets of the main unit: input (white), output (black), and I/O mixture (zebra). Applicable networks are also displayed, enabling the unit type to be determined at a glance.
- Enabling DIN rail attachment
  Not only usual screw attachment but also DIN rail attachment is possible.
- Efficient safe terminal block structure
  This terminal block has terminal screws which are self-lifting after they are loosened, thus preventing screws from being lost at the time of wiring to the round amplifier terminal, increasing the wiring work efficiency.
  The use of power supply and I/O terminal blocks with the finger protection fitting (IP20) helps improve the safety of machines and equipment.

(Self-lifting screw terminals / Finger protection fitting)

- Contributing to panel design standardization
  The unit frame is unified to a compact size of 148 x 50 x 40 (W x H x D: mm), allowing design standardization without worrying about external view modifications by I/O specifications and network specifications. Network modifications can be dealt with only by unit replacement.

- 25% reduction of total installation space
  "Common extension terminal block" which extends the number of common terminals with one-touch operation is optionally available.
  The use of “common extension terminal block” eliminates the need for a separate relay terminal block for common extension, reducing the total installation space by 25%.

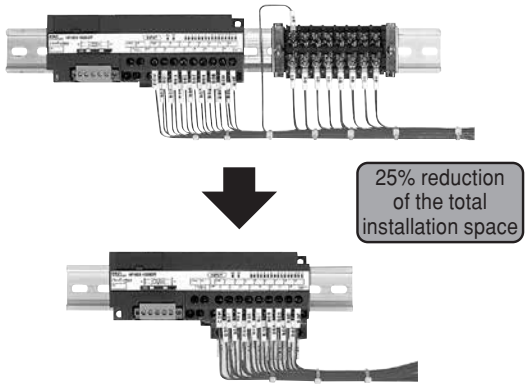

- Common extension bar
  Used to extend the common terminal block that is mounted on the lower side of the main unit.
  (NR1□Y-08R07DT excluded)
- Model: NR1XV-CB1

The terminals are divided into two groups for electrical connection: ▭ and ■ as shown below.

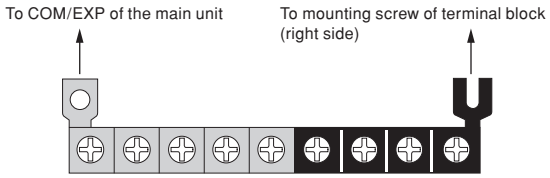

■Models

• NR1 series

Product name		Model (ordering code)	Specifications
OPCN-1 SX bus T-link	16-point input	**NR1□X-1606DT**	24 V DC, 16-point bi-directional input, detachable terminal block
	8-point Ry output	**NR1□Y-08R07DT**	240 V AC/110 V DC, 8-point Ry output, detachable terminal block
	16-point Tr output	**NR1□Y-16T05DT**	24V DC, 16-point Tr sink output, detachable terminal block
	8/8-point mixture	**NR1□W-16T65DT**	24 V DC, 8-point source input, 24 V DC, 8-point Tr sink output, detachable terminal block
LonWorks	16-point input	**NR1LX-1606DT**	24 V DC, 16-point bi-directional input (4 points can be used as pulse inputs), detachable terminal block
	8-point Ry output	**NR1LY-08R07DT**	240 V AC/110 V DC, 8-point Ry output, detachable terminal block
	9-point input/2-point output	**NR1LW-11R80DT**	24 V DC, 9-point source input (4 points can be used as pulse inputs), 2-point Ry output, detachable terminal block
Option		**NR1XV-CB1**	Common extension bar (9 pins)

*1 □ specification (applicable network specification): J=OPCN-1, S=SX bus, T=T-link

■Specifications

• Power supply specifications

Item	Specifications			
Model	**NR1□ (NR1L excluded)**		**NR1LX/NR1LW**	**NR1LY**
Rated input voltage	24 V DC			
Allowable input voltage range	21.6 to 26.4 V DC		20.4 to 27.6 V DC	
Dropout tolerance	1 ms or less (at 21.6 V)		1 ms or less (at 20.4 V)	
Inrush power	5 A, 1 ms or less		3 A, 5 ms or less	25 A, 5 ms or less
Dielectric strength	1500 V AC, 1 minute (Between power supply input terminal and frame ground)			
Insulation resistance	10 MΩ or more with 500 V DC megger (Between power supply input terminal and frame ground)			
Power consumption	OPCN-1 SX bus T-link	NR1□X-1606DT: 1.4 W or less NR1□Y-08R07DT: 3 W or less NR1□Y-16T05DT: 1.4 W or less	NR1LX-1606DT: 1.6 W or less NR1LW-11R80DT: 1.6 W or less	NR1LY-08R07DT: 3 W or less

■I/O specifications

• Digital input terminal

Item		Specifications			
Model		**NR1TX**	**NR1SX**	**NR1JX**	**NR1LX**
No. of input points		16 points	16 points	16 points	Di: 12 points Pulse: 4 points
Rated voltage		24 V DC			
Max. allowed voltage		26.4 V DC			
Input format		No polarity			
Rated current		7 mA			
Input impedance		3.3 kΩ			
Standard operation range	OFF→ON	15 to 26.4V			
	ON→OFF	0 to 5V			
Input delay time	OFF→ON	5 ms or less	Batch change through parameter settings*1	3 ms or less	10 ms or less
	ON→OFF	5 ms or less		3 ms or less	10 ms or less
Max. pulse input frequency		-			20 Hz
Common configuration		16 points/common			
Insulation method		Photocoupler insulation			
Delating condition		None			
Weight		Approx. 240 g			

*1 (OFF to ON) - (ON to OFF): 1-1, 3-3 (default), 3-10, 10-10, 30-30, 100-100

• Digital output terminal

Item		Specifications	
Model		**NR1□Y-08R**	**NR1□Y-16T**
No. of output points		8 points	
Output format		Relay	Tr sink
Rated voltage		240 V AC 50/60 Hz 110 V DC	24 V DC
Max. allowed voltage		264 V AC or less, 110 V DC or less	19.2 to 30V DC
Max. load current		30 V DC/ 240 V AC: 2 A/point 110 V DC: 0.2 A/point	0.6 A/point (30 V DC), 4.8 A/common
Output delay time	OFF→ON	10 ms or less	1 ms or less
	ON→OFF	10 ms or less	1 ms or less
Leakage current when OFF		None	Max. 0.1 mA
Surge suppresser circuit		None	Clamp diode
Maximum opening/closing frequency		1800 times/hour	3600 times/hour (Restriction with induction load applied)
Common configuration		1 point/common	16 points/common
Insulation method		Relay insulation + Photocoupler insulation	Photocoupler insulation
Delating condition		None	None
Weight		Approx. 250 g	Approx. 240 g

Digital I/O terminal

Item		Specifications			
Model		**NR1TW**	**NR1SW**	**NR1JW**	**NR1LW**
No. of I/O points		Di: 8 points Do: 8 points	Di: 8 points Do: 8 points	Di: 8 points Do: 8 points	Di: 9 points Do: 2 points
I/O form		Source input, sink output			
Rated input voltage		24 V DC			
Max. allowed voltage		26.4 V DC			
Rated current		7 mA			
Input impedance		3.3 kΩ			
Standard operation range	OFF→ON	15 to 26.4V			
	ON→OFF	0 to 5 V			
Input delay time	OFF→ON	5 ms or less	Batch change through parameter settings*1	3 ms or less	10 ms or less
	ON→OFF	5 ms or less		3 ms or less	10 ms or less
Max. pulse input frequency		-			20 Hz
Rated output voltage		24 V DC			240 V AC 50/60 Hz 110 V DC
Max. allowed voltage		19.2 to 30 V DC			264 V AC or less 110 V DC or less
Max. load current		0.6 A/point (30 V DC), 4.8 A/common			30 V DC/ 240 V AC: 2 A/point 110 V DC: 0.2 A/point
Output delay time	OFF→ON	1 ms or less			10 ms or less
	ON→OFF	1 ms or less			10 ms or less
Leakage current when OFF		Max. 0.1 mA			None
Surge suppresser circuit		Clamp diode			Varistor
Maximum opening/closing frequency		3600 times/hour (Restriction with induction load applied)			1800 times/hour
Common configuration		8 points/common x 2 circuits			1 point/common
Insulation method		Photocoupler insulation			Relay insulation
Delating condition		None			
Weight		Approx. 240 g			Approx. 260 g

- Communication specifications

Item	Specifications			
	OPCN-1	T-link	SX bus	LonWorks
Transmission line format	Bus type (multi-drop)	Bus type (multi-drop)	Bus type (ring)	Free topology (bus-type/star-type)
Max. signal points	127 words (2032 points)/master 125 kbps/1 km	128 words (2048 points)/master	512 words (8192 words)	228 bytes
Transmission speed/distance	250 Kbps/800 m 500 kbps/480 m 1 Mbps/240 m (Changes with the switch)	500 kbps/1 km	25 Mbps/25 m	78 kbps/500 to 2700 m
No. of connected stations	31 stations	32 stations	254 stations (including CPU module) *2	64 units/segment
Electric characteristics	EIA RS-485	Dedicated pulse transfer method	EIA RS-422	—
Transmission medium	Shielded twisted pair cable	Shielded twisted pair cable	SX bus expansion cable	Twisted pair (1P-S)
Occupied word *1	8 points: 1 word, 16 points: 1 word, 32 points: 2 words, 8/8 (Mixture): 2 words, 16/16 (Mixture): 2 words, analog input: 8 words, analog output: 4 words, NR1SF-HP4DT: 40 words			

*1 When the master module of MICREX-SX series is used
*2 The max. number of the I/O terminal (for SX bus) connections are 10 units each in the inside and outside per base board.
Consumes the SX bus transmission power supply by 25 mA per I/O terminal.

■System configuration

<MICREX-SX: SPH>

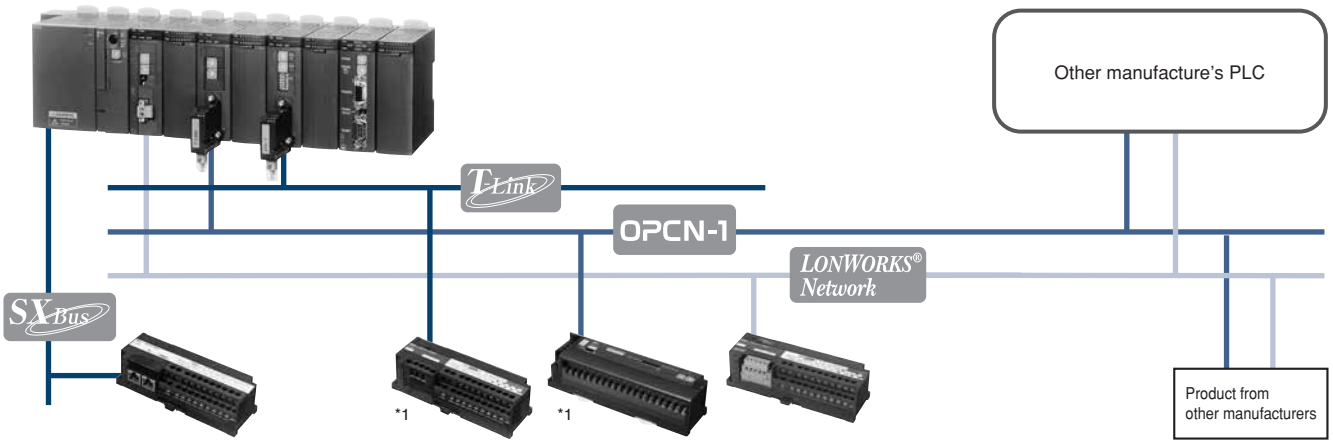

*1 Please mount the terminating resistor with the accessory of the master module (2 pieces provided on the SX) if the I/O terminals for OPCN-1 or for T-link are a terminating station.
(The I/O terminals have not been fitted with terminating resistors.)

Remote Terminal Master/Slave Module: NP1L-RM1

■Features

- Connectable to Fuji Electric's RM20 and RM21 remote terminal series.
- Data can be transmitted up to 5 km between master/slave modules and remote terminals.
- The use of a signal converter makes it possible to use existing, unoccupied cables and trolley lines.

NP1L-RM1
(Picture No. No.KDD06-002)

■Communication specifications

Item		Specifications
No. of SX bus connectable modules		Max. 8 units/configuration
No. of SX remote terminal link		1 system
Remote terminal No. of connectable terminals/no. of signal points		1:1 mode: Max. 64 words 1:N or N:N mode: Max. 128 units or 1024 points
No. of connectable remote terminals		1:1 mode: 1 slave/1 master 1:N mode: RM20/21 series terminal units
Remote terminal specification	Transmission system	Time sharing cyclic multiplex transmission system
	Signal/Transmission speed	RZ signal/2400 baud (Built-in modulation/demodulation reference clock 7.2 K)
	Transmission form	1:1 transmission (connection of between the SX master and slave station) 1:N or N:N transmission (Connects existing remote terminals. The NP1L-RM1 slave mode cannot be connected.)
	Signal transmission line	Twisted pair cable (CPEV, KPEV), CVV, trolley wires
	Transmission distance	Φ0.9: 2.0 km (Max. 128 remote stations) Φ1.2: 3.5 km (Max. 128 remote stations) 2 mm^2: 5.0 km (Max. 64 remote stations) 2 to 5 km: Varies with the cable and connection configuration.
External wire connections		Terminal block 6 poles (For transmission wire connections, for 24 V DC external power supply connections, for grounding etc.)
External power supply (for communication)		20 to 30 V DC, 3.6 VA (When 24 V DC: 0.15 A)
Internal current consumption		24 V DC, 140 mA or less
Weight		Approx. 210 g

■System configuration

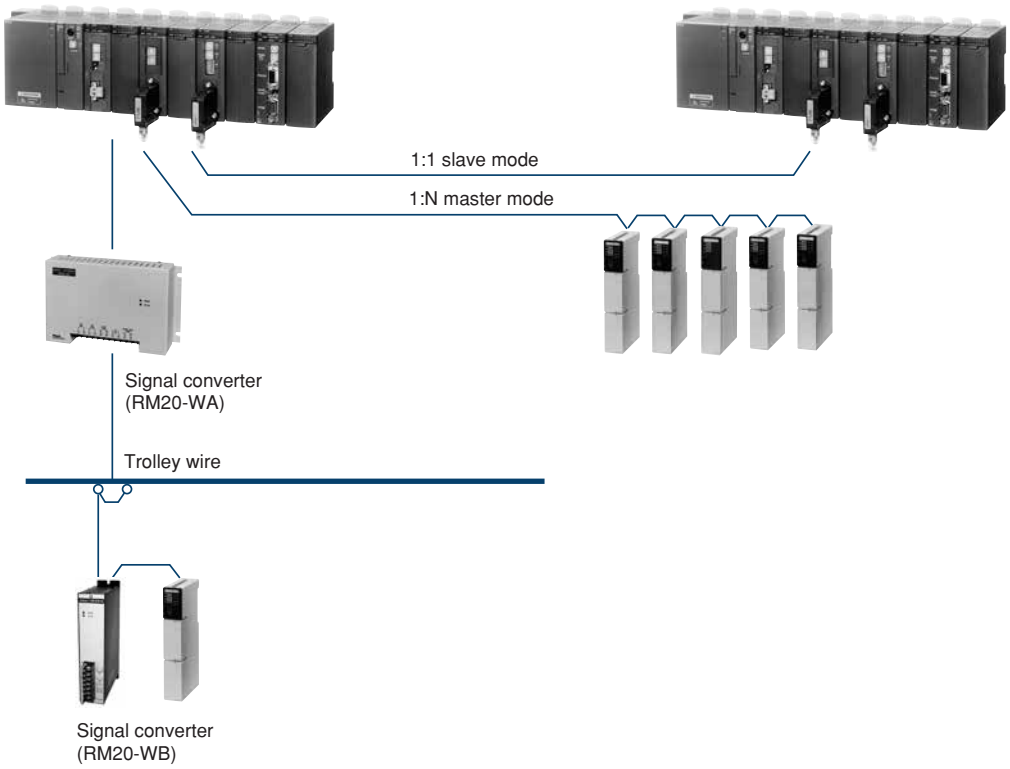

USB Communication Module: NP1L-UC1

■Features

- Mounted on the base board to connect the CPU module (SPH2000/3000/3000D) with the programming support tool SX-Programmer.
- This module and the programming support tool are connected by a USB cable.
- The maximum number of these modules that can be connected in one configuration is 238.
- The programing support tool can be used while checking the actual state of IOs (actuator, control equipment) by mounting this module on each distributed base board.

NP1L-UC1
(Picture No. 0000-000)

■Communication specifications

Item		Specifications
No. of SX bus connectable modules		Max. 238 units/configuration *1
USB interface	No. of ports	1 port
	Transmission speed	12 Mbps (USB1.1 Full Speed)
	Transmission distance	3 m or less
	Connection method	USB-B connector
Max. number of units for loader communication simultaneously (Max. number of units for loader command communication simultaneously)		Up to 8 units *2
Combinable CPU		SPH2000, SPH3000, SPH3000D single CPU system *3
Internal current consumption		24 V DC 150 mA or less
Weight		Approx. 140 g

*1 Cannot be mounted on a remote I/O base board, such as T-link, OPCN-1, DeviceNet, and PROFIBUS-DP.
*2 Includes the number of other pieces of equipment such as HMI using the loader command communication.
*3 Cannot be used in combination with SPH200/SPH300/SPH3000MM/SPH3000MG or in a multi-CPU system and CPU redundant system.

■System configuration

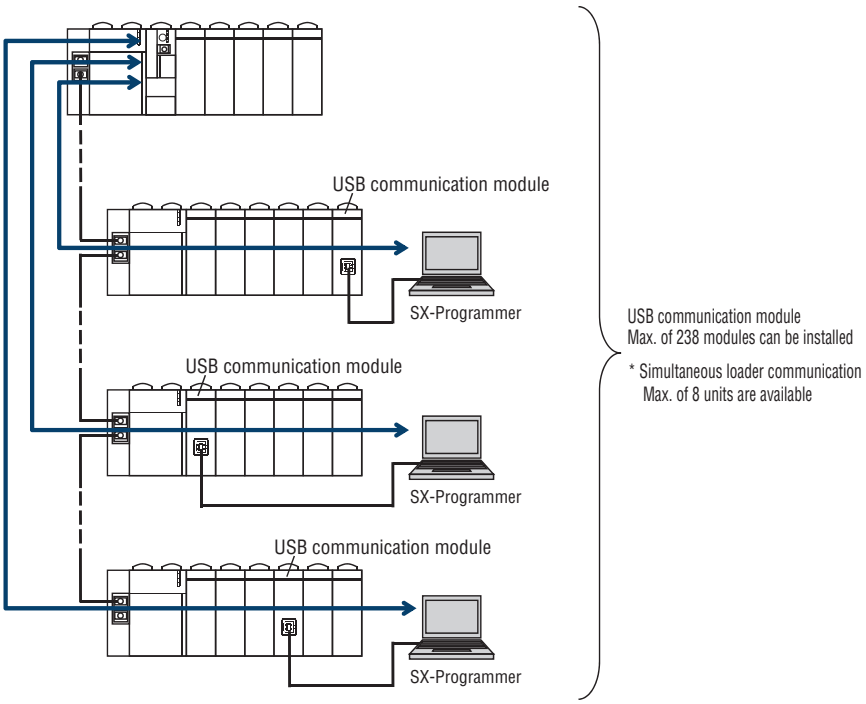

■Programming support tool SX-Programmer support version

The following version is required to use this module.

- Expert (D300win) V3 (Type: NP4H-SEDBV3) : V3.6.9 or later
- Standard (Type: NP4H-SWN) : V3.0.14 or later

SX bus Optical Link Module : NP1L-OL1/OL3
SX bus Optical Converter Unit : NP2L-OE1

■Features

Using an SX bus optical link module/unit makes an SX bus transmission line optical and it possible to build a long-distance distributed system with the SX bus.

NP1L-OL1/OL3

- Mounted on the base board to transmit the SX bus signal as an optical signal.

NP2L-OE1

- This unit connects between the SX bus cable and optical fiber cable to transmit the SX bus signal as an optical sign.

NP1L-OL1
(Picture No. AF00-195)

NP2L-OE1
(Picture No. AF00-198)

■Transmission specifications

Item		Specifications			
Model		**NP1L-OL1**	**NP1L-OL3**		**NP2L-OE1**
No. of connectable modules		Max. 64 units/configuration (total No. of NP1L-OL1, NP1L-OL3 and NP2L-OE1)			
Optical fiber	Type	PCF (Polymer Clad Fiber)	Quartz glass multi mode (GI)	Quartz glass single mode	PCF (Polymer Clad Fiber)
	Core/Clad diameter	200 μm/230 μm	50/125 μm	10 μm or less/125 μm	200 μm/230 μm
	Min. bending radius *1	50 mm			
	Optical connector	Type: F07	SC connector		Type: F07
Transmission distance *1		HC-20/07 made by Sumitomo Electric Industries: 400 m max. between stations (total extension: 12.8 km) HG-20/08 made by Sumitomo Electric Industries (discontinued product): 800 m max. between stations (total extension: 25.6 km)	2 km max. between stations (total extension: 64 km) Multi mode: 2 km max. between stations (total extension: 64 km) Single mode: 10 km max. between stations (total extension: 320 km)		HC-20/07 made by Sumitomo Electric Industries: 400 m max. between stations (total extension: 12.8 km) HG-20/08 made by Sumitomo Electric Industries (discontinued product): 800 m max. between stations (total extension: 25.6 km)
Internal current consumption		24 V DC, 54 mA or less			DC 24 V, 70 mA or less
Power terminal (External power supply) *2	Rated input voltage	—			24 V DC (DC22.8 ~ 26.4 V)
	Inrush current	—			165 mA or less: When a switching power supply is used *3 50 Ao-p-70 μs: When 24 V DC is directly turned ON
Weight		Approx. 135 g			Approx. 155 g

*1 The minimum bending radius may depend on the type of optical fiber cable used.
The transmission distance above is achieved at 25°C. The transmission distance is shorter at lower temperatures. For details, contact the optical fiber manufacturer.
*2 As an external power supply, use a switching power supply (conforming to the UL standard) with "reinforced insulation" of 24 V DC 1 A or more for each unit.
*3 When 24 V DC is directly applied, the rush current is 50 Ao-p, 70 μs (reference value). This value depends on power conditions.

- Recommended cables and tools (For PCF)
- Optical fiber: HC-20/07 made by Sumitomo Electric Industries (type: H-PCF)
  HG-20/08 (H-PCF type) made by Sumitomo Electric Industries (discontinued product)
- Optical connector: CF-2071 made by Sumitomo Electric Industries
- Crimp tool: CAK-0057 made by Sumitomo Electric Industries

■System configuration

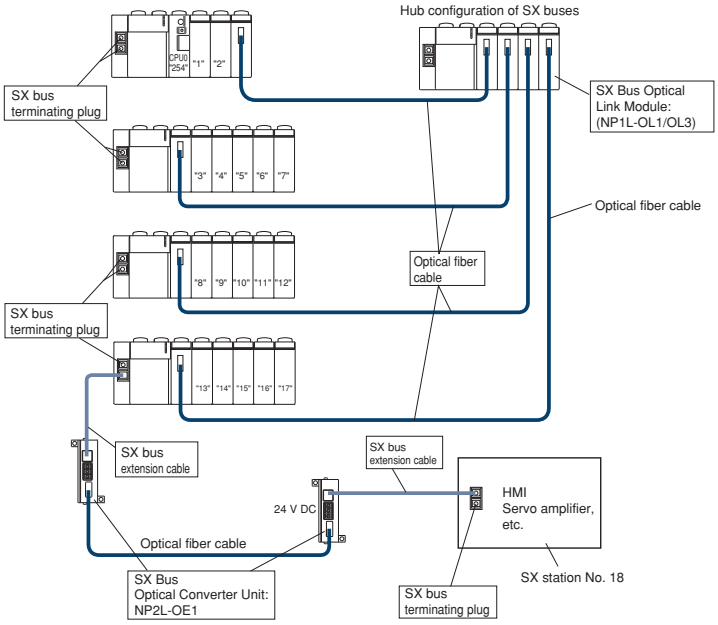

- Replacing existing NP1L-OL2 with NP1L-OL3
  The modules are connector compatible, but please replace both ends with NP1L-OL3.
  The optical link element of NP1L-OL2 has an optical wavelength of 860 nm, whereas the optical link element of NP1L-OL3 has an optical wavelength of 1310 nm. Since the two modules are not compatible in this respect, both ends need to be replaced to enable communication via optical fiber.
  When replacing NP1L-OL2 with NP1L-OL3, the optical fiber utilized with the NP1L-OL2 can be used as-is. Furthermore, CPU module programs and programming support tools can be used as-is without modification.

SX bus Electric Repeater Unit: NP2L-RP1

■Features

- SX bus connection using another 25 m electric cable is enabled by correcting the signal waveforms of the SX bus electric cable.
- Up to three units can be used in one SX system, increasing the total extension length of the SX bus electric cable to a max. of 100 m.

NP2L-RP1
(Picture No. KD03-017)

■Specifications

Item	Specifications	Remarks
Rated power supply voltage	24 V DC	Uses externally supplied power
Power supply voltage tolerance	22.8 to 26.4 V DC	Uses externally supplied power When connecting servo and inverter: 24 to 26.4 V DC
Current consumption	Max. 1470 mA	Current consumption: Approx. 70 mA 24 V power supply to the SX bus cable: Up to two 700 mA systems
Dimension (W×H×D) [mm]	50 × 95 × 95	—
SX bus transmission distance	25 m	Total extension of the SX bus cable connected to each connector
Max. number of usable units	3 units	The max. total extension of the SX bus cable is 100 m.
Weight	Approx. 150 g	

■System configuration example

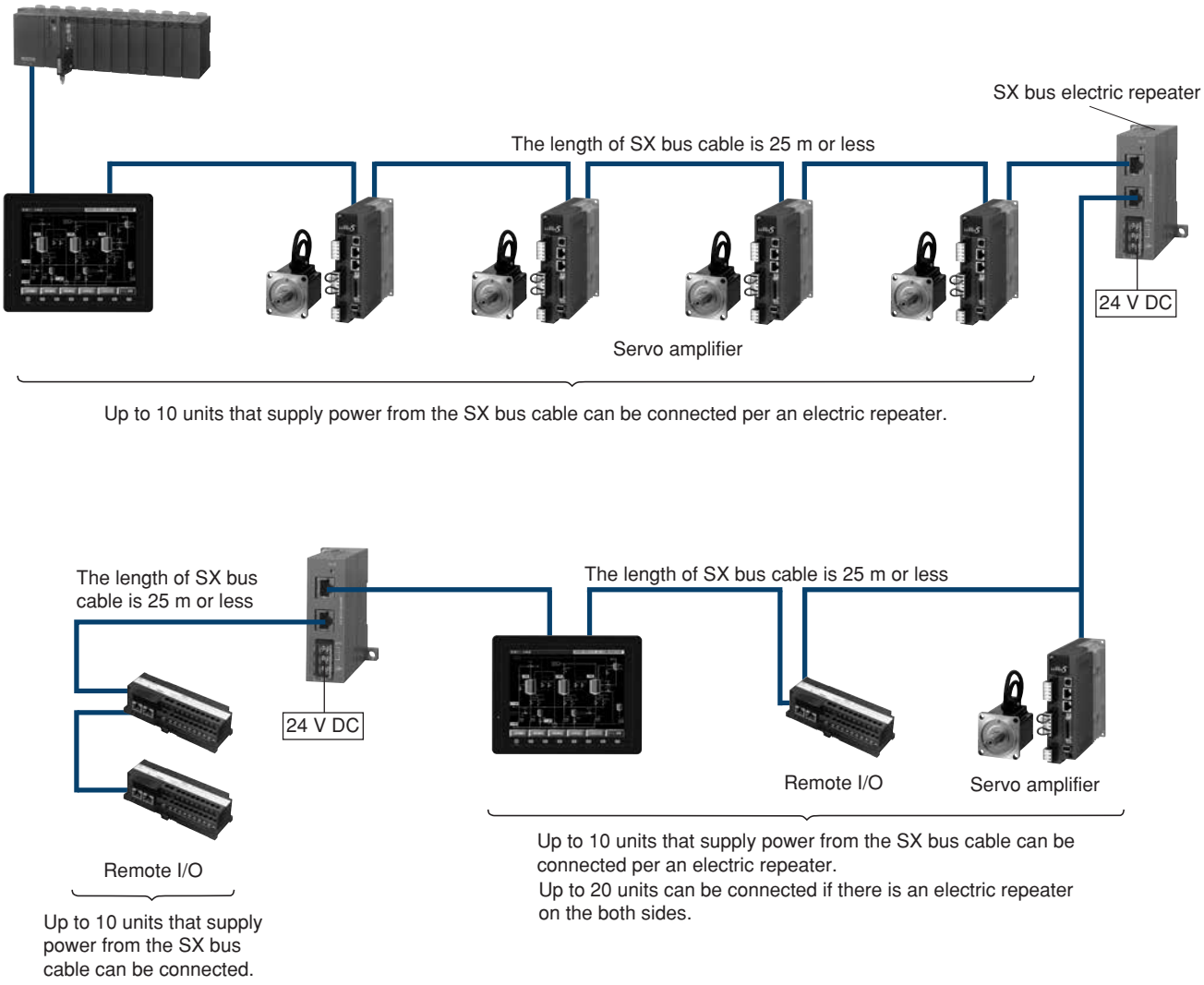

SX bus Duplication Unit: NP2L-BH1

■Features

- It is a unit to duplicate the SX bus cable from the base board. It is installed on the left side of the base board (adjacent to the SX bus connector of the base board) to physically separate the SX bus into 2 systems.
- The duplicated SX bus which allows the continued bus communication even when a line disconnection can be applicable to ships, power plants and vehicle systems that require high reliability.

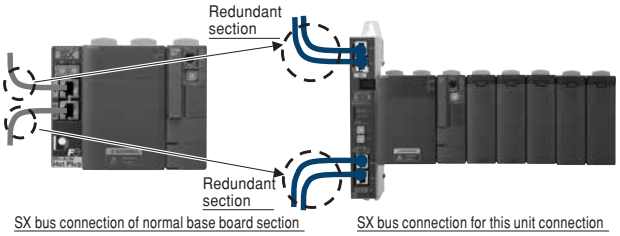


NP2L-BH1
(Picture No. KDD11-001)

■Specifications

Item	Specifications
Communication method	SX bus communication (conforming to the SX bus transmission specifications)
Number of systems	2 systems of IN and OUT
Transmission speed	25 Mbps (conforming to the SX bus transmission specifications)
Interface connection shape	SX bus extension connector (modular jack)
No. of connectable modules	Max. 10 units
Connection distance	Max. of 25 m distance between units, total length of 100 m
Power supply	Unnecessary external power supply (24 V SX bus cable used)
Station number setting function	Available (using the station address setting rotary switch on the unit)
Installation method	Independent type (no slots on the base board occupied)
Occupied number of I/O points	Input: 16 points (They are used for the status area and have no actual input function.)
Internal current consumption	24 V DC, 120 mA or less
Pick-up power source	Operated by 24 V DC from the SX bus cable.
Weight	Approx. 500g

■System configuration example

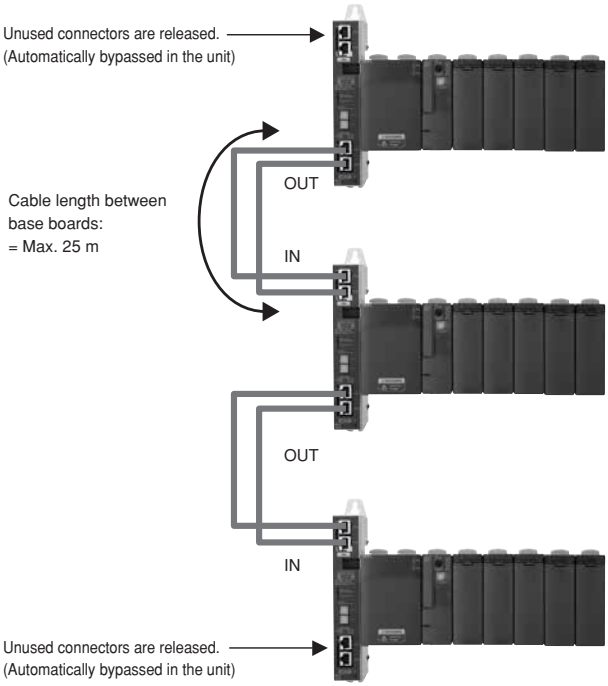

■Duplication operation

- Switch operation
  When a broken wire is detected, the path is switched to another SX bus cable.

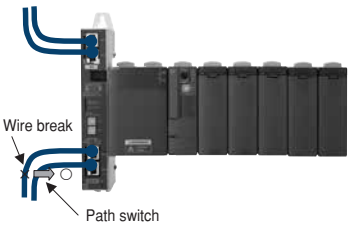

- Bypass function
  When the SX bus signals on both paths are stopped, the SX bus signals are looped back and the bypass connection is established in the duplication unit. (The SX bus disconnection is prevented.)

Optical T-link and P/PE-link Systems

The optical T-link and P/PE-link systems ensure a superior network configuration with distinguished noise resistance by making use of an optical converter and optical fiber cables.
The optical T-link and P-link systems have the following features.

- System configurations, such as redundant optical lines, can be established.
- Since an electric transmission system and an optical transmission system can be mixed, you can build an economical system by adopting optical transmission systems only for the required portions.
- Optical link systems as shown in the table below can be configured according to your application.

■Configuration example

System	Loop connection	Cascade connection 1	Cascade connection 2 (single)	Cascade connection 3 (redundant)	Star connection (can be redundant)
Features	Economical configuration with the least number of optical converters.	Suitable for long-distance transmission.	Suitable for long-distance transmission.	Ensures a higher degree of reliability by adding redundancy backup to the system shown on the left.	**a** Minimizes down units in the system. **b** Consists of units positioned at a long distance from one another in a radial pattern.
Example of an optical T-link system configuration OCT: Optical converter for T-link	[Constraint] OCT: Up to 3 units 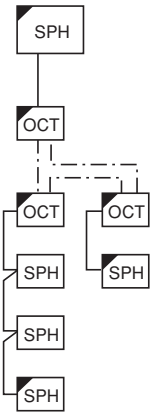	[Constraint] OCT: Up to 16 units 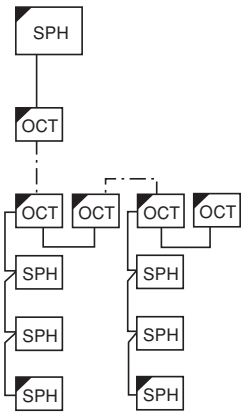	[Constraint] OCT: Up to 16 units 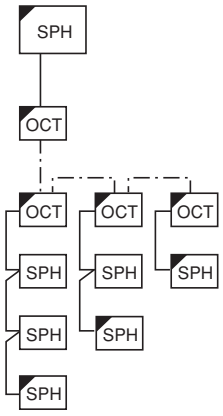	[Constraint] OCT: Up to 16 units 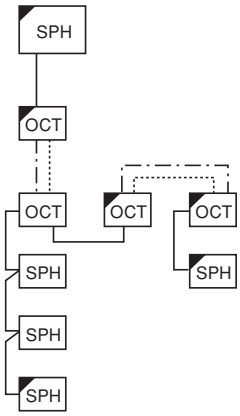	[Constraint] OCT: Up to 8 pairs (16 units) 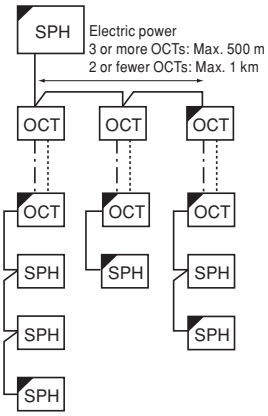
Example of an optical P/PE-link system configuration OCP: Optical converter for P/PE-link	[Constraint] OCP: Up to 16 units (P-link) 64 units (PE-link) 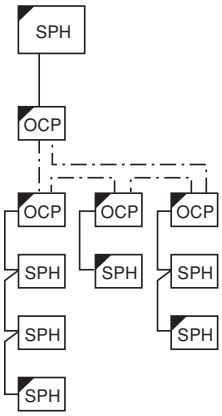	[Constraint] OCP: Up to 16 units (P-link) 64 units (PE-link) 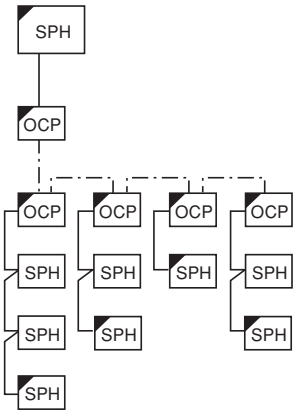		[Constraint] OCP: Up to 16 units (P-link) 64 units (PE-link) 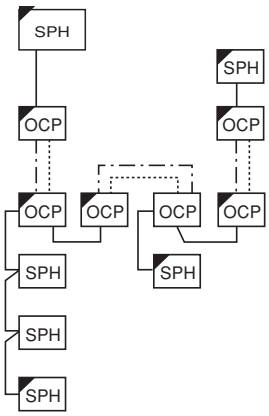	[Constraint] OCP: Up to 8 pairs (16 units) (P-link) Up to 32 pairs (64 units) (PE-link) 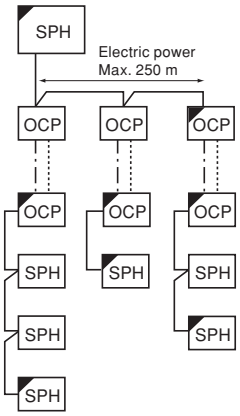
Operation in case of an error	Loop wiring can maintain transmission even if an optical fiber cable between optical converters is broken.	If an error occurs in any of the optical converters, transmission will be interrupted at the faulty unit.			The effect of an optical converter error is limited to the faulty unit, allowing for a highly reliable system.

Note 1: The cable symbols shown in the figure above are as follows:
- ‒ · ‒ · ‒ · ‒ : Optical fiber cable (main)
- ····· : Optical fiber cable (redundancy backup)
- ———— : Cable for a T-link or cable for a P-link

Note 2: Connect a terminal resistor for a T-link (100 Ω) or for a P-link (75 Ω) to each unit marked with ◤ in the figure.
Note 3: When a cable for a T-link or for a P/PE-link is not connected to an optical converter, connect a terminal resistor to the converter.

T-link Optical Converter: FNC160A-C20

FNC160A-C20
(Picture No. KKD10-008)

■Features

- This optical converter has two optical transmit/receive modules (two channels).
- The main power supply has a wide input ranging from 100 to 240 V AC/110 V DC.
- System configurations such as cascade connections (up to 16 units), loop connections (up to three units), star connections (up to 8 pairs), and redundant optical lines can be established.
- Function to detect optical transmission line breakage that enables the relay contact to turn on in case of a line breakage.
- This optical converter has a mounting hole compatible with the FNC100/110 and F □□ 140 modules.

■Specifications

Item		Specifications
Model compatible with T-links	No. of connectable modules	32 slave stations on a T-link per master
	Transmission speed	500 kbps (RZ)
	Cable	Shielded twisted pair cable
	Terminal	100 Ω terminal at both segment ends
	Transmission distance	Max. 1 km 1 km when a pair of T-KPEV-SB 1.25 mm² cables manufactured by Furukawa Electric Co. is used 700 m when a pair of TKPEV-SB 0.75 mm² cables
Compatible with optical fiber	Type	Multimode quartz glass fiber (2-core)
	Refractive index profile	GI type
	Core diameter/Clad diameter	50/125 μm
	Numerical aperture	0.2
	Transmission loss	3 dB/km
Compatible with optical modules	Optical connector	SC type connector
	Emission wavelength	860 nm (typ)
	Permissible loss (transmit, receive)	10 dB or below (When 3 dB/km fiber is used: 3 km)
Weight		Approx. 1,500 g

P/PE-link Optical Converter: FNC360A-C20

FNC360A-C20
(Picture No. KKD10-007)

■Features

- This optical converter has two optical transmit/receive modules (two channels).
- The main power supply has a wide input ranging from 100 to 240 V AC/110 V DC.
- For P-link system configurations, cascade connection (up to 16 units), loop connections (up to 16 units), and star connections (up to 8 pairs) can be established.
- For PE-link system configurations, cascade connections (up to 64 units), loop connection (up to 64 units), star connection (up to 32 pairs), and redundant optical.
- Function to detect optical transmission line breakage that enables the relay contact to turn off in case of a line breakage.
- This optical converter has a hole compatible with the FNC320A, FNC302A, FNC300, and FNC200 modules.

■Specifications

Item		Specifications
Model compatible with P/PE-links	No. of connectable modules	P-link: 16 units PE-link: 64 units
	Transmission speed	5 Mbps (RZ)
	Cable	Coaxial cable (5C2V)
	Terminal	75 Ω terminal at both segment ends
	Transmission distance	P-link: Max. 250 m PE-link: Max. 500 m Between stations: Min. 1 m
Compatible with optical fiber	Type	Multimode quartz glass fiber (2-core)
	Refractive index profile	GI type
	Core diameter/Clad diameter	50/125 μm
	Numerical aperture	0.2
	Transmission loss	3 dB/km
Compatible with optical modules	Optical connector	DL type connector
	Emission wavelength	840 nm (typ)
	Permissible loss (transmit, receive)	10 dB or below (7.5 dB or below considering aged deterioration)
Weight		Approx. 1,500 g

Dummy Module: NP1F-DMY

■Features

- When your system will be expanded in the future, the dummy module can be used as a substitute for the extension module.
- If an active module has failed during operation of the system, the system can be restarted when you replace the failed module with the dummy module (which, however, cannot perform the functions of the failed module).

NP1F-DMY
(Picture No. AF00-44)

■Specifications

Item	Specifications
Model	**NP1F-DMY**
Position on which a substitutable module can be mounted.	All modules except power supply module and CPU module On a base board directly connected to SX bus Cannot be mounted on a T-link base board or other remote I/O module.
No. of occupied words	0 words
Internal current consumption	24 V DC, 26 mA or less
Weight	Approx. 120 g

Multiuse Communication Module: NP1F-MU1

■Features

- High-speed communication (RS-485: Max. 460.8 kbps) with actuators and sensors can be implemented.
- Optimal communication with devices of various manufacturers can be implemented by freely creating a communication protocol. Protocols can be created by modifying the sample FB.
- Microcomputer circuit boards can be replaced by creating original firmware.

NP1F-MU1
(Picture No. KDD05-018)

■Performance specifications

Item	Specifications	
Model	**NP1F-MU1**	
Port	RS-232C	RS-485
No. of ports	1 channel	1 channel
Transmission system	Half-duplex communication method	
Synchronization method	Start-stop synchronous transmission	
Transmission speed	300/600/1,200/2,400/4,800/9,600/19,200/38,400/57,600/115,200 bps	300/600/1,200/2,400/4,800/9,600/19,200/38,400/57,600/115,200/230,400/460,800 bps
Transmission distance	15 m or less	1 km or less (transmission speed: 19.2 kbps or less)
No. of connectable modules	1:1 (including one external device)	1:31 (Max.)
Connection method	D-sub, 9-pin connector (male)	6-pole terminal block
Transmission system	Transmission protocol by creating program	
Internal current consumption	24 V DC, 80 mA or less	
Weight	Approx. 175 g	

■System configuration

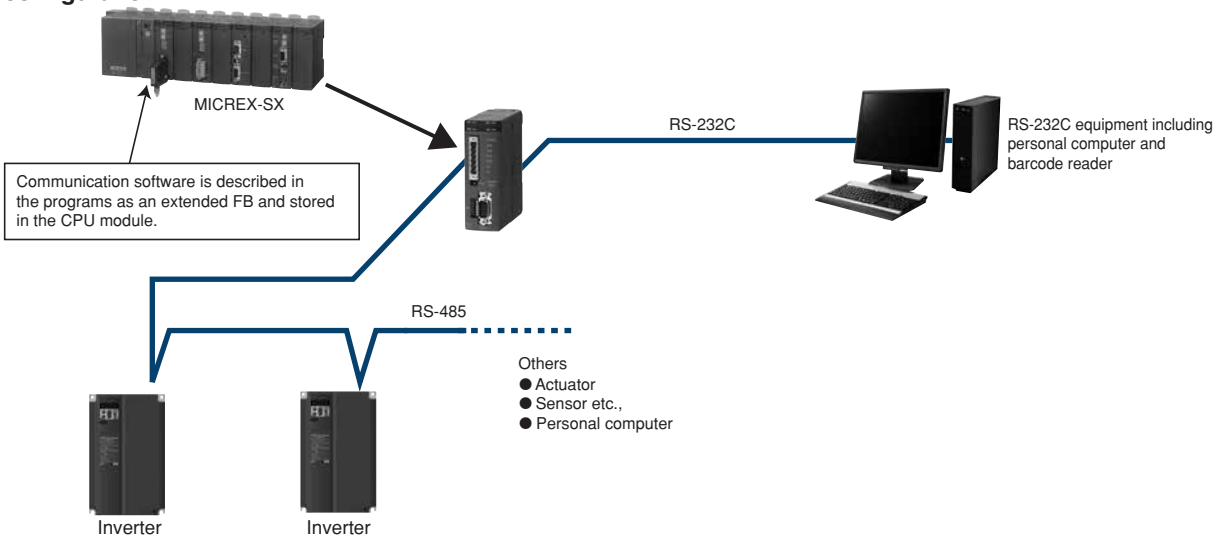

■Outline of Original Firmware Development

Original high-speed communication modules can be built by combining user programs developed in the C language programming, service functions for multiuse communication modules that can be downloaded from websites, and system objects.

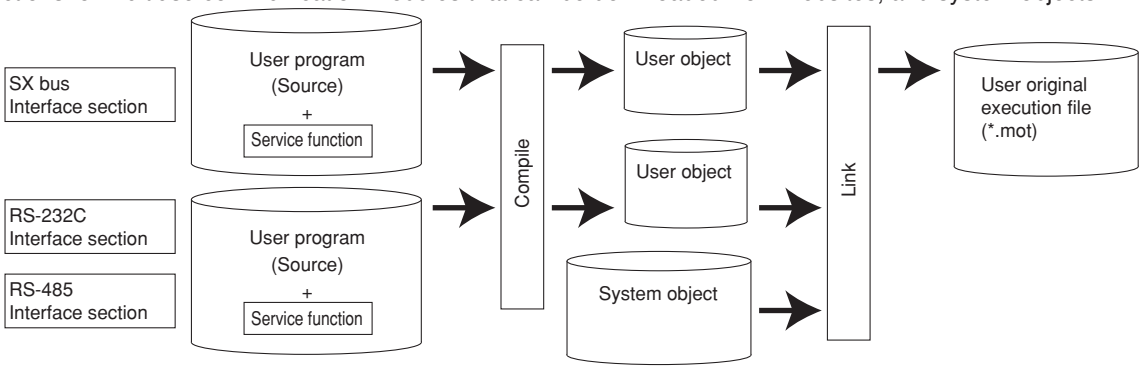

Flow Meter F/AD Conversion Module: NP1F-PI4

Features

- Instantaneous and cumulative flows can be displayed at the same time.
- Various flow meters can be connected.
  - · No-voltage semiconductor input (two-wire/three-wire)
  - · Voltage input (two-wire/three-wire)
  - · Two-wire current input
  - · Two-wire contact input
- A transducer is unnecessary as the module is insulated with high pressure-resistance (1000 V AC) between channels.
- A displacement type flow meter (oval type flow meter) can be connected.

Specifications

Item		Specifications
Model		**NP1F-PI4**
No. of input points		4 points
Connected sensor inputs		No-voltage contact pulse, 2-wired open-collector pulse, 3-wired open-collector pulse, 2-wired voltage pulse, 3-wired voltage pulse, 2-wired current pulse
Input frequency		0 to 10 kHz
Input wave form		Nearly square wave
Pull-up resistor		22 kΩ
Max. allowed input		-1 to 30 V, 0 to 30 mA
Min. pulse width		50 μs or more (50 ms or more when filter is set)
Input signal level	Contact input (Relay/ transistor)	Detection level: ON: 200 Ω or less, OFF: 100 kΩ or more Contact capacity: When the sensor power supply is 13.5 V: 15 V DC, 15 mA or more When the sensor power supply is 24 V: 30 V DC, 30 mA or more
	Voltage/ current pulse	Detection level: 3 Vp-p (Current input: Voltage-converted value indicated to the left)
Input impedance		Disabled (10 kΩ or more), 200 Ω, 500 Ω or 1 kΩ can be selected.
Input pulse detection		AC coupling or rising-edge detection
Integrated value update cycle		5 ms/4 points (1 ms, when for only integrated value mode)
Response time		Integrated value update cycle + tact cycle Instant value update cycle + tact cycle
Sensor power supply (Where Ta = 25°C) *1		1) Output voltage: 13.5 V DC ±15%/24 V DC ±15% (Selection of either one) 2) Permissible current; when 13.5 V DC: 35 mA or less, when 24 V DC: 24 mA or less 3) Short-circuit limitation current; when 13.5 V DC: approx. 40 mA, when 24 V DC: approx. 28 mA 4) Ripple noise: Approx. 250 mV (p-p) or less 5) Sudden change of the load: 3 V (0-P) or less (condition of sudden change of the load: 0 to 40 mA)
Filter function		The filter for the chattering removal can be selected. (time constant: approx. 4 ms)
No. of occupied words		Input: 8 words + output 4 words
Insulation method		Photo-coupler insulation and transformer insulation (Between pulse input terminals and FG) Transformer insulation (Between pulse input terminals and channels)
Dielectric strength		1000 V AC, 1 minute between pulse input terminals and FG (short circuit current: 10 mA) 1000 V AC, 1 minute between pulse input terminals and channels (short circuit current: 10 mA)
Insulation resistance		10 MΩ or more with 500 V DC megger between pulse input terminals and FG 10 MΩ or more with 500 V DC megger between pulse input terminals and channels
Internal current consumption *2		390 mA or less (When the sensor power supply is used.) 200 mA or less (When the sensor power supply is not used.)
Non use output treatment		Basically, open
Applicable cable		Use the twisted pair wire with the shield. (Wiring length: 500 m or less)
Weight		Approx. 330 g
External connections		Detachable screw terminal block (M3 x 20 poles)

*1 An ambient temperature during short circuit should be 40°C or less.
*2 This can be reduced depending on the used number of channels and the used number of sensor power supplies.

Characteristic diagram

In the case of the input frequency range: 0 to 200 Hz and the instant value unit (INT type): 0 to 23000.

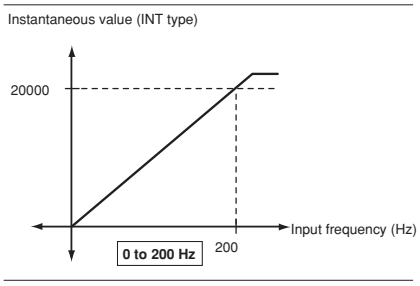

External wiring

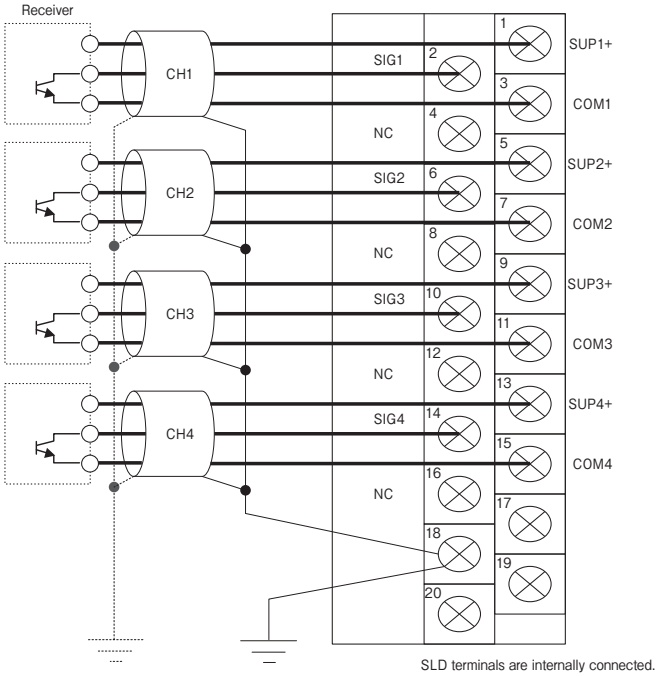

Filter setting switching example

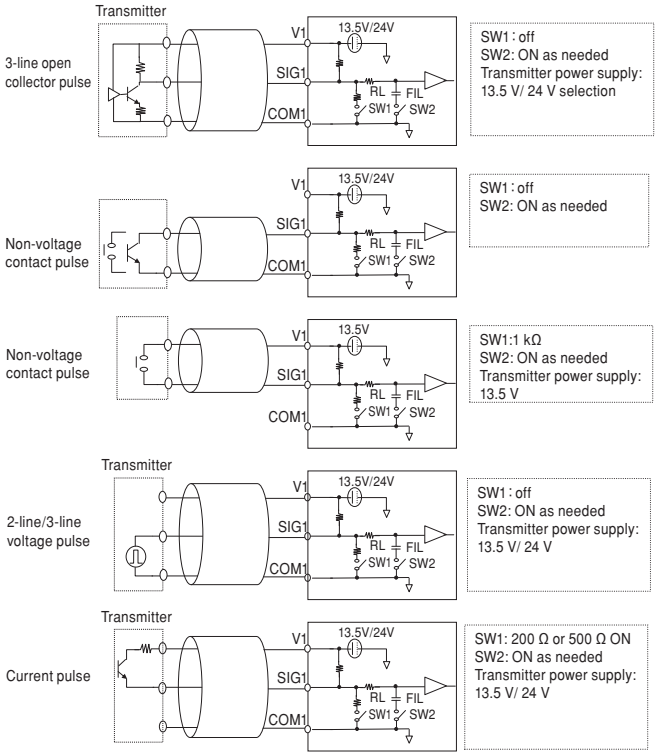

High-speed Counter Module: NP1F-HC□

■Features

NP1F-HC2□

- High-speed input pulses can be counted up to 2 channels.
- Compatible with 3 types of input signals.
  1) 90° phase-difference pulse 2) Forward/reverse pulse
  3) Pulse + sign
- 4 types of operation modes
  1) Ring operation 2) Gating operation
  3) Compare detection operation
  4) Phase-Z detecting operation
- Since the input voltage for **NP1F-HC2MR** supports 5/12/24 V DC, it becomes possible to standardize the external power supply at 24 V DC and to improve pulse input connectivity.
- The pulse input filter of **NP1F-HC2MR1** is set so that connection with the inverter FRENIC5000 VG7 of Fuji Electric is optimized.

NP1F-HC2
(Picture No. AF97-520)

NP1F-HC8

- High-speed input pulses can be counted up to 8 channel, 50 kHz.
- Compatible with 3 types of input signals.
  1) 90° phase-difference pulse 2) Forward/reverse pulse 3) Pulse + sign
- 3 types of operation modes
  1) Ring operation 2) Gating operation 3) Resetting operation

■Performance specifications

Item		Specifications			
Model		**NP1F-HC2**	**NP1F-HC2MR**	**NP1F-HC2MR1**	**NP1F-HC8**
Count input signal	Input type	2-phase signal (90° phase-difference), forward /reverse signal, coded pulse (Selected by the software)			
	Level	Open collector signal or differential signal (Differential signal is based on NP1F-HC2 only)			
	Input voltage	5 V DC	5/12/24 V DC		5 V DC
Counter	Type	Ring counter function, reset function, gate function, comparison function (NP1F-HC2□), phase Z detection (NP1F-HC2□)			
	No. of channels	2 channels (independent)			8 channels (independent)
	Counting speed	500 kHz	200 kHz	50 kHz	50 kHz
	Counting range	Signed 32-bit binary (80000000H to 7FFFFFFFH)			Signed 16-bit binary (8000H to 7FFFH)
	Multiplication function	x 4 (2-phase signal, 90° phase difference only)			
	Reset operation	Soft command			
	Gating operation	External input signal and soft command			
	Compare detecting operation	Hard circuit and soft command			-
	Phase-Z detecting operation	External input signal and soft command			-
Comparison	No. of output points	1 point /channel			-
	Comparison range	Same as the counting range			-
	Comparison contents	(Counted value) ≥ (Compared value) to Output ON			-
	Comparison output	Open collector output (sink type) 24 V DC			-
No. of occupied words		Input: 8 words/Output: 8 words (total: 16 words)			Input: 10 words/Output: 2 words (total: 12 words)
Internal current consumption		24 V DC, 85 mA or less			24 V DC, 100 mA or less
Weight		Approx. 140 g			Approx. 195 g

■Function item list

Function	Description
Linear operation (**NP1F-HC2□**)	Counting operation for detecting underflow/overflow when the pulse count value is under/over the min./max. value. (Combination with the extension FB)
Ring operation	Ring-type counting operation to set the min. value when the pulse count value exceeds the max. value or to set the max. value when the count value is less than the min. value.
Gating operation	Pulse counting operation activated only when the internal or external gate input is in the counting enabled state.
Reset operation	Resetting the counter value to zero (0) by internal command.
Compare detecting operation (**NP1F-HC2□**)	Comparing the preset compare value and a count value to output the result to the compare output.
Phase-Z detecting operation (**NP1F-HC2□**)	Reading a count value for each phase-Z detection.

■System configuration

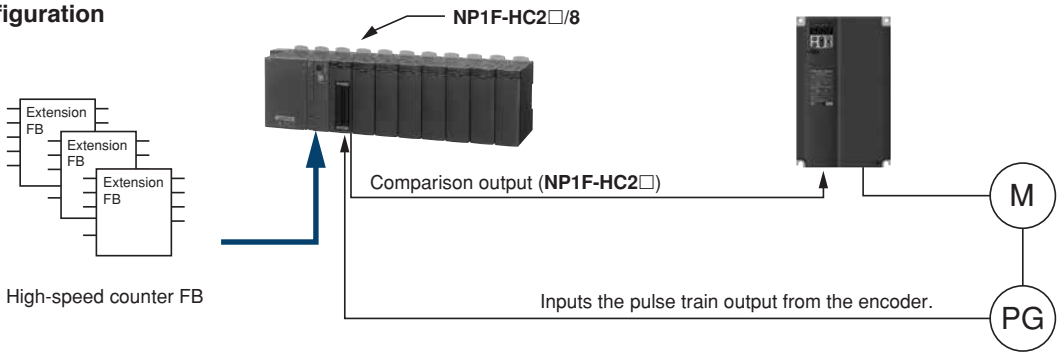

Two-axis Pulse Train Output Positioning Control Module: NP1F-HP2

■Features

- Combined with the servo amplifier motor of the pulse train command input type or the stepping motor driver allows high-precision positioning.
- Use of an extension FB facilitates embedding of the necessary functions including axis-independent single-function positioning to multi-axis simultaneous start positioning (pseudo linear interpolation).

NP1F-HP2
(Picture No. AF97-517)

■Performance specifications

Item		Specifications
No. of control axes		2 axes
Positioning control		Open loop
Acceleration/deceleration characteristics		Trapezoidal acceleration/deceleration (at pulse generation mode)
Max. position data		Max. 2^{32}-1 pulse /command
Pulse train command	Command frequency	250 kHz
	Frequency resolution	16 bits/20 bits
	Output type	Open collector output (forward pulse + reverse pulse)
Control functions		1 type (Pulse generation mode)
Combination actuator		Servo system prepared pulse train command input or stepping motor
No. of occupied words		Input: 8 words/Output: 8 words (total: 16 words)
Internal current consumption		24 V DC, 95 mA or less
Externally supplied power		24 V DC, 35mA or less
Weight		Approx. 180 g

■System configuration

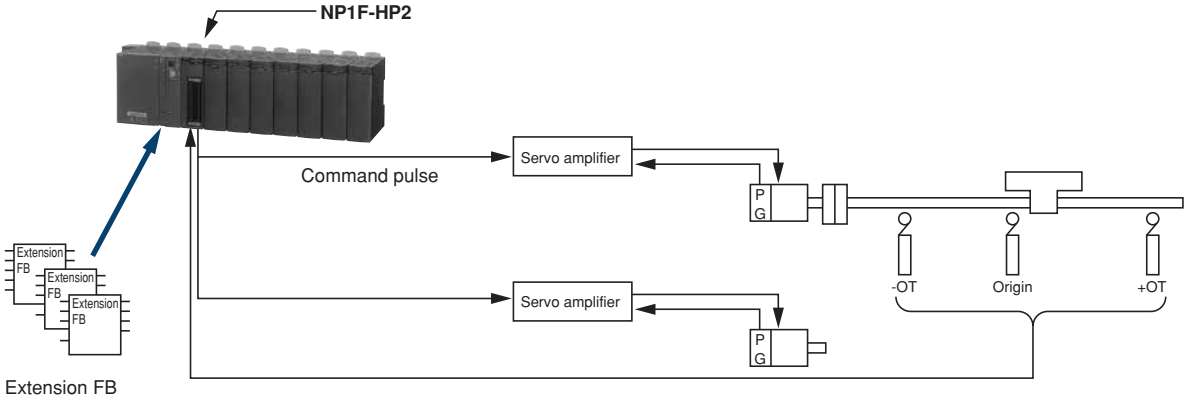

Two-axis Pulse Train Multiple Positioning Control Module: NP1F-MP2

■Features

- Combined with the servo amplifier motor of the pulse train command input type or the stepping motor driver allows high-precision positioning.
- Use of an extension FB facilitates embedding of the necessary functions including axis-independent single-function positioning to multi-axis simultaneous start positioning (pseudo linear interpolation), interpolation, and cam/running cut.
- Current position (current feedback value) can be detected with the feedback pulse. Two types of operation modes are available (pulse generation mode and position command mode)

NP1F-MP2
(Picture No. AF97-518)

■Performance specifications

Item		Specifications
No. of control axes		2 axes
Positioning control		Open loop
Acceleration/deceleration characteristics		Trapezoidal acceleration/deceleration (at pulse generation mode)
Max. position data		Max. 2^{32}-1 pulse/command
Pulse train command	Command frequency	250 kHz
	Frequency resolution	16 bits/20 bits
	Output type	Open collector output (forward pulse + reverse pulse)
Feedback pulse	Input frequency	500 kHz
	Input type	Open collector input or differential signal (90˚ phase difference, phase A, B and phase Z)
Manual pulse unit	Input frequency	500 kHz
	Input type	Open collector input or differential signal (90˚ phase difference, phase A, B or forward pulse + reverse pulse)
Control functions		2 types (Pulse generation mode, positioning command mode)
Combination actuator		Servo system prepared pulse train command input or stepping motor
No. of occupied words		Input: 14 words/Output: 8 words (total: 22 words)
Internal current consumption		24 V DC, 95 mA or less
Externally supplied power		24 V DC, 35mA or less
Weight		Approx. 200 g

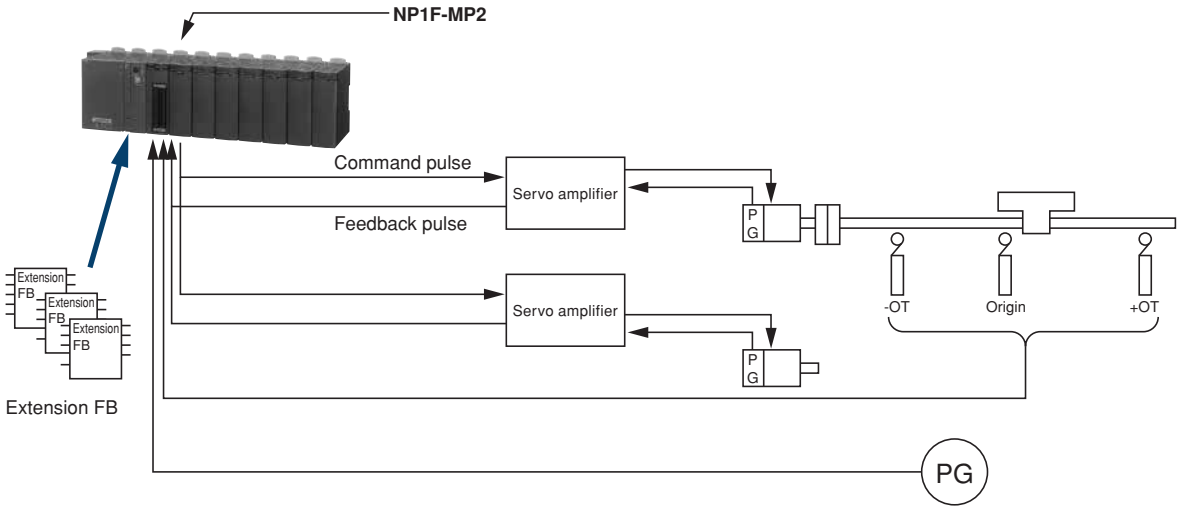

Two-axis High-speed Pulse Train Positioning Module (Differential Output): NP1F-HD2A

Features

- This positioning module operates at a maximum frequency of 5MHz, and performs positioning with a differential signal pulse train. The positioning of two axes can be controlled with a single module.
- Various functions are capable such as single-axis linear positioning, rotor positioning, two-axis linear interpolation positioning, feedback pulse count, and manual pulse input positioning.
- Devices requiring high-frequency pulse signals such as linear servomotors and direct drive servomotors can be controlled.

NP1F-HD2A

Performance specifications

Item		Specifications	
Model		**NP1F-HD2A**	**NP1F-HD2**
No. of controlled axes		Two axes	
Position control		Open loop control	
Acceleration/deceleration characteristics		Trapezoidal acceleration/deceleration, S-shape acceleration/deceleration	Trapezoidal acceleration/deceleration
Max. position data		2^{32}-1 pulse/command	
Pulse train command	Command frequency	5MHz	
	Frequency resolution	24 bits	
	Output type	Differential output (forward pulse + reverse pulse, 90° phase difference 2-phase pulse multiplied by 4, pulse + direction signal)	
Feedback pulse	Input frequency	5MHz	-
	Input type	Differential input (90° phase difference 2-phase pulse multiplied by 1/2/4, forward pulse + reverse pulse)	-
Manual pulse	Input frequency	5MHz	-
	Input type	Differential input (90° phase difference 2-phase pulse multiplied by 1/2/4, forward pulse + reverse pulse)	-
Control function		Standalone PTP, two-axis linear interpolation, automatic origin return, override, JOG operation	Standalone PTP, override, manual operation
Combination actuator		Servo system or stepping motor equipped with pulse train input function	
No. of occupied words		Input: 18 words, output: 10 words (total: 28 words)	Input: 8 words, output: 8 words (total: 16 words)
Internal current consumption		24 V DC, 70mA or less	
External power supply		24 V DC, 20mA or less (supplied by external power supply)	
Weight		Approx. 180 g	

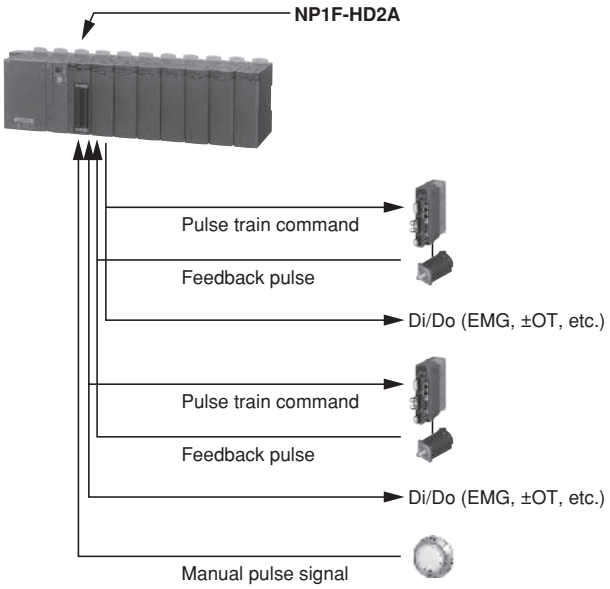

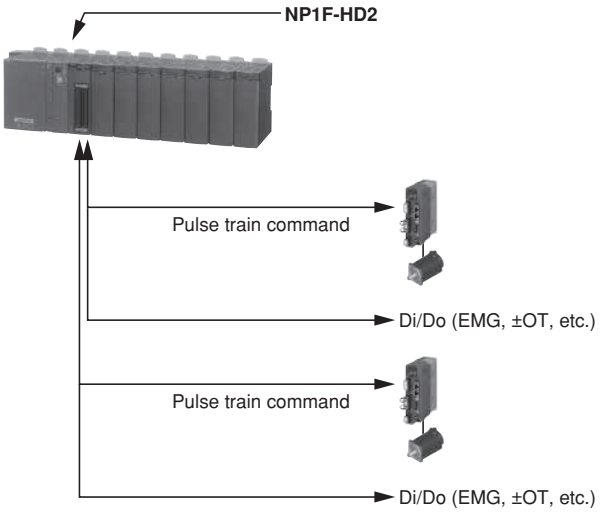

Two-axis Analog Multiple Positioning Control Module: NP1F-MA2

■Features

- Combined with the servo amplifier motor of the pulse train command input type or the stepping motor driver allows high-precision positioning.
- Use of an extension FB facilitates embedding of the necessary functions including axis-independent single-function positioning to multi-axis simultaneous start positioning (pseudo linear interpolation), interpolation, and cam/running cut.
- 3 types of operation modes are available.
  (Pulse generation mode, position control mode, position instruction mode)

NP1F-MA2
(Picture No. AF97-519)

■Performance specifications

Item		Specifications
No. of control axes		2 axes
Positioning control		Semi-closed loop
Acceleration/deceleration characteristics		Trapezoidal acceleration/deceleration (at pulse generation mode)
Max. position data		Max. 2^{32}-1 pulse /command (at pulse generation mode)
Speed command	Command voltage	Analog speed command (0 to ±10.24 V)
	Signal type	Analog voltage command
Feedback pulse	Input frequency	500 kHz
	Input type	Open collector input or differential signal (90˚ phase difference, phase A, phase B and phase Z)
Manual pulse unit	Input frequency	500 kHz
	Input type	Open collector input or differential signal (90˚ phase difference, phase A, phase B, or forward pulse + reverse pulse)
Control functions		3 types (Pulse generation mode, positioning command mode, positioning control mode)
Combination actuator		Servo system prepared analog speed command input
No. of occupied words		Input: 14 words/Output: 8 words (total: 22 words)
Internal current consumption		24 V DC, 150 mA or less
Weight		Approx. 200 g

■System configuration

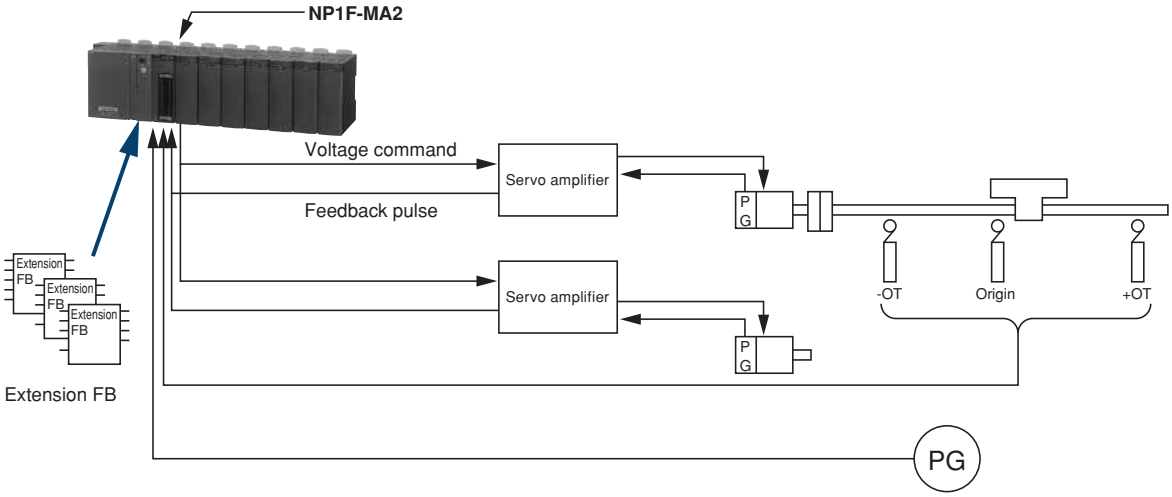

4-axis High-speed Pulse Train Positioning Module (Differential Output): NP1F-HD4

NP1F-HD4

■Features

- This positioning module operates at a maximum frequency of 5MHz, and performs positioning with a differential signal pulse train. The positioning of four axes can be controlled with a single module.
- Various functions are available such as single-axis linear positioning, rotor positioning, multi-axis linear interpolation positioning, two-axis circular interpolation positioning, helical interpolation positioning, position speed command positioning, feedback pulse count, manual pulse input positioning, PWM pulse output, automatic origin return, absolute position encoder control, electronic cam control and backlash correction.
- Devices requiring high-frequency pulse signals such as linear servomotors and direct drive servomotors can be controlled.

■Performance specifications

Item		Specifications
Model		**NP1F-HD4**
No. of controlled axes		4 axes
Position control		Open loop control
Acceleration/deceleration characteristics		Trapezoidal acceleration/deceleration, S-curve acceleration/deceleration
Max. position data		2^{32}-1 pulse/command
Pulse train command	Command frequency	5MHz
	Frequency resolution	24 bits
	Output type	Differential output (forward pulse + reverse pulse, 90° phase difference 2-phase pulse multiplied by 4, pulse + direction signal)
Feedback pulse	Input frequency	5MHz
	Input type	Differential input (90° phase difference 2-phase pulse multiplied by 1/2/4, forward pulse + reverse pulse)
Manual pulse	Input frequency	5MHz
	Input type	Differential input (90° phase difference 2-phase pulse multiplied by 1/2/4, forward pulse + reverse pulse)
Control function		1 type (Pulse generation mode)
Combination actuator		Servo system or stepping motor equipped with pulse train input function
No. of occupied words		Input: 36 words, output: 20 words (total: 56 words)
Internal current consumption		24 V DC, 120mA or less
External power supply		24 V DC, 95mA or less (supplied by external power supply)
Weight		Approximately 190g

■System configuration

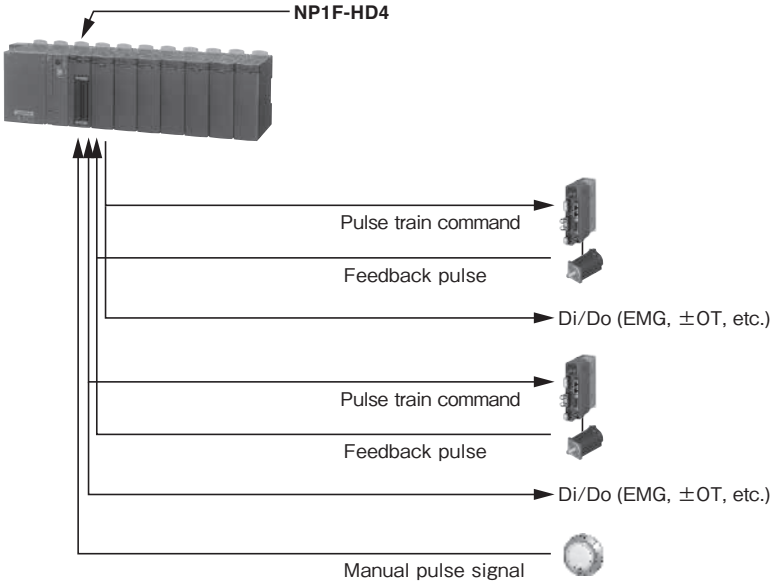

4-axis Pulse Train Output Positioning Control Unit: NR1SF-HP4DT

Features

- Combined with the servo amplifier motor of the pulse train command input type or the stepping motor driver allows high-precision positioning.
- Minimum program for data setting and command operation that does not need an extension FB allows you to control the positioning.

NR1SF-HP4DT

Performance specifications

Item		Specifications
Model		**NR1SF-HP4DT**
No. of control axes		4 axes
Speed command	Command signal	Pulse train command
	Max. command frequency	250 kHz (conditions: shielded twist pair cable: 2 m or less)
	Output format	Open collector, sink output
	Max. load current	50 mA (24 V DC)
	Insulation method	Photocoupler insulation
	Signal type	Forward pulse (CW) + reverse pulse (CCW)
Feedback pulse input		None
External pulse input		None
DI signal	No. of points	8 points (2 points / axis) Origin LS (x 4 CH) Timing signal / Phase Z (x 4 CH)
	Input format	Source input (non-voltage contact input)
	Input model	DC (IEC 61131-2 type 2)
	Rated current	Approx. 4 mA (24 V DC)
	Input impedance	Approx. 5.6 kΩ
	Insulation method	Photocoupler insulation
	No. of points for common	2 points (It allows with the common extension bar.)
No. of occupied words		Total: 40 words (input: 16 words / output: 24 words)
Internal current consumption		24 V DC, 20 mA or less
Externally supplied power		24 V DC, 150 mA or less
Weight		Approx. 230 g

System configuration

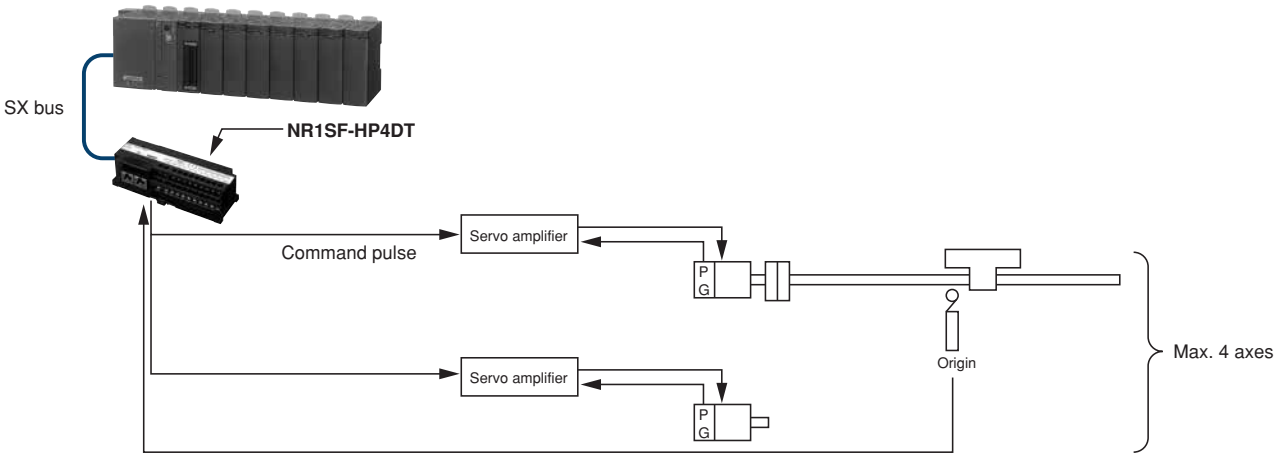

■Positioning Control Module Function List

No.	Item	Function	NP1F-HD4	NP1F-HD2A	NP1F-HD2	NP1F-HP2	NP1F-MP2		NP1F-MA2			NR1SF-HP4DT
							Pulse generation	Position command	Pulse generation	Positioning control	Position command	
1	Pulse train command	Outputs the pulse train command signal for forward and reverse pulses.	○	○	○	○	○					○
2	Pulse generation mode positioning	References the pulse count and frequency data in the CPU module and carries out positioning by generating the command pulse using the built-in pulse generator.	○	○	○	○	○		○			○
3	Position control mode positioning	Directly references position and speed data in the CPU module and carries out positioning.	○							○		
4	Position command mode positioning	References position data in the CPU module and carries out positioning by generating the command pulse using the built-in pulse generator.	○					○			○	
	Automatic origin return behavior	It is possible to select and use the 6-pattern origin return behavior via the values set in the internal registers.	○	○								
	JOG operation behavior	Performs JOG via the values set in the internal registers.	○	○	○							
	Single-axis positioning behavior	Performs single-axis positioning via the values set in the internal registers.	○	○	○	○	○		○			○
	Two-axis linear interpolation positioning behavior	Performs two-axis linear interpolation positioning via the values set in the internal registers.	○	○								
	Circular interpolation positioning behavior	Performs interpolation positioning by drawing an arc between the start point (present position) and end point (target position).	○									
	Helical (linear arc) interpolation positioning behavior	Performs interpolation by combining arc interpolation and linear interpolation.	○									
	Electronic cam behavior	Performs synchronous positioning via the pre-registered cam pattern.	○									
	Single-axis positioning speed override behavior	The movement speed can be changed during positioning via the values set in the internal registers.	○	○	○	○	○		○			○
	Single-axis positioning target position override behavior	The target position can be changed during positioning via the values set in the internal registers.	○	○	○	○	○		○			
	Single-axis positioning interrupt positioning behavior	Performs positioning by starting positioning in the interrupt mode and detecting the external interrupt input or Z-phase signal input.	○	○	○	○						
5	Present Value Count	Counts command pulses and detects the command present value (counts with pulse multiplied by 4). Note 1)	○	○	○	○	○	○	○	○	○	○
		Counts the feedback pulse and detects the feedback present value (counts with pulse multiplied by 4). Note 2)	○	○			○	○	○	○	○	
6	Z-phase position detection (FB based origin return behavior)	Detects the command position at the phase-Z rising edge (or falling edge).	○	○	○	○	○	○				○
		Detects the deviation amount at the phase-Z rising edge (or falling edge).					○	○	○	○	○	
		Detects the present feedback position at the phase-Z rising edge (or falling edge).					○	○	○	○	○	
7	Interrupt position detect (Interrupt positioning control operation)	Detects the command position at the rising edge (or falling edge) of the external interrupt signal.	○	○	○	○	○	○				○
		Detects the deviation value at the rising edge (or falling edge) of the external interrupt signal.					○	○	○	○	○	
		Detects the present feedback position at the rising edge (or falling edge) of the external interrupt signal.					○	○	○	○	○	
8	Automatic-start frequency setting	Allows the user to set the automatic-start frequency.	○	○	○	○	○		○			○
9	Trapezoidal acceleration/ deceleration computation	Computes trapezoidal acceleration/deceleration.	○	○	○	○	○		○			○
	S-shape acceleration/deceleration computation	Computes the S-shape acceleration/deceleration.	○	○								
10	Deceleration point automatic computation	Automatically computes the deceleration point.	○	○	○	○	○		○			○
11	Pulse output stop processing	When the pulse output is interrupted, two types of trapezoidal deceleration (or S-shape deceleration) can be selected. Note 3)	○	○	○	○	○		○			○
12	Emergency stop processing	Carries out quick stop when an emergency stop error is detected.	○	○	○	○	○					○
		Immediately stops the pulse output.						○				
		Immediately clears the speed command voltage to zero (0 V).							○	○	○	
13	±OT error detection	Carries out deceleration and stop when a ±OT error is detected.	○	○	○	○	○		○			○
		Immediately stops the pulse output.						○				
		Performs exponential deceleration and stop.								○	○	
14	Transmission error monitoring	Monitors module control program errors on the CPU module. Carries out quick stop when a transmission error is detected.	○	○	○	○	○		○			○
		Immediately stops the pulse output.						○				
		Performs exponential deceleration.								○	○	
15	External pulse count	Counts the external input pulse for manual pulse unit operation or synchronous operation.	○	○			○	○	○	○	○	
16	Positioning data first reading	Up to 4 items of positioning data per axis can be registered in the FIFO buffer. The registered positioning data is executed sequentially. It is also possible to make additional settings in the FIFO buffer during operation.	○				○		○			
17	External input signal detection	Detects the input status of all DI signals.	○	○	○	○	○	○	○	○	○	○
18	External output signal setting	All DO signals can be switched with the CPU module.	○	○	○	○	○	○	○	○	○	○
	PWM pulse output behavior	The PWM pulse output can be implemented via the values set in the internal registers.	○	○								
	ABS encoder control behavior	Absolute values can be obtained from the Σ-7S Series encoder manufactured by Yaskawa Electric Corporation.	○	○								

Note 1) Counting is performed for NP1F-HD2, NP1F-HD2A and NP1F-HD4 with the single-phase or two-phase pulse multiplied by 4.
Note 2) Counting is performed for NP1F-HD2A and NP1F-HD4 with the single-phase or two-phase pulse multiplied by 1 and 4.
Note 3) The S-shape deceleration only corresponds to NP1F-HD2A and NP1F-HD4.

Positioning Control Extension FB Software

This is extension FB software which presents a positioning function in combination with a positioning module.

This FB software can be downloaded from our website at no charge.

■High-speed counter/multi-channel high-speed counter extension FB

This FB allows to use a high-speed counter module (NP1F-HC□). A multi-function FB and a simple-function FB are available.

■Counter FB for high-speed input

This FB allows to use the pulse counter input function of the high-speed digital input module (NP1X3206-A).

■Simple positioning control extension FB

This is a simple positioning control FB for the digital output module (NP1Y32T09P1-A) containing a pulse train output function. It performs 1-axis PTP positioning with pulse train instructions.

■Positioning FB

- 1-axis PTP positioning FB (pseudo straight line interpolation function included) (SPH300)
  This FB is used to accelerate up to the set speed and then reduce the speed and stop at the set position. With the extension FB, position control also is performed. Therefore, desired positioning is possible merely by setting a target position and speed through the sequence program. This FB also allows you to switch the speed by means of the override function (etc.) when in operation, and easily enables the reduction of feeding time through high-speed running and high-precision positioning through low-speed running. Moreover, the position and speed to be instructed can be set in units of mm or mm/s. Pulse number conversion of position data is performed with this FB, so that the ease of use is increased.
  This is optimum for feed and assembly machines such as basic loaders and unloaders.

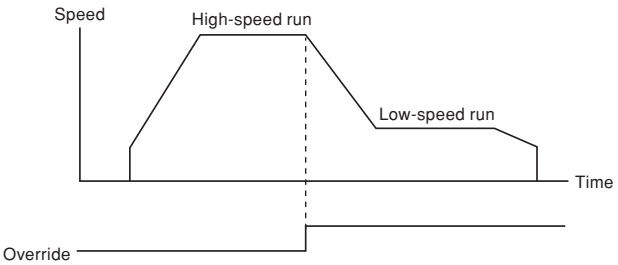

  In addition, the FB enables pseudo straight line interpolation motions through simultaneous initiation of two, three, or four axes. This usage is applicable to control of high-rise warehouses or assembly machines, for example. It also enables pseudo straight line interpolation motions regarding arbitrary two axes among multiple axes. The FB is also effective for controlling feed lines. This FB is applicable to a pulse train multiple positioning control module, analog multiple positioning control module, and pulse train output positioning control module.

- Highly-functional 1-axis positioning FB (SPH300)
  This FB presents a 1-axis PTP positioning function combined with S-curve acceleration/deceleration and manual pulse run functions.
  This FB is needed for electronic cam and traveling cut-off operation.
  This FB is applicable to a pulse train multiple positioning control module and analog multiple positioning control module.
- Compact 1-axis FB
  This FB allows you to decrease the size of programs to be subjected to the pulse train multiple positioning control module and analog multiple positioning control module and reduce the data quantity in memory. It serves to perform 1-axis PTP positioning. This FB is optimum for application to SPH200.

■Electronic cam FB (SPH300)

Positioning through cam motions has been adopted for control of various machines including packaging machines. Using this FB enables various cam mechanism motions (cam patterns), eliminating the need for any set-up change which is needed for a mechanical cam. Moreover, this FB enables motions which cannot be conducted by a mechanical cam.

- Cam operation FB
  This FB serves to perform 1-axis cam positioning. It not only can be used as a substitute for conventional motions of a mechanical cam but also allows motions which cannot be conducted by a mechanical cam.
  This FB is applicable to a pulse train multiple positioning control module and analog multiple positioning control module.

Moreover, the extension FB is available that contains a function needed for control of a traveling cut-off machine. Work which synchronizes with conveyor speed does not need the conveyor to be stopped and restarted, largely helping to increase the speed of a machine. This FB has been used for various kinds of machine control besides control of traveling cut-off machines. Using this machine eases synchronization control.
This FB is applicable to a pulse train multiple positioning control module and analog multiple positioning control module.

- Rotary shears control

Rotary shears control refers to cutoff control regarding a roll-shaped cutoff section (cutter or press), by which materials that are continuously fed (film, paper, etc.) are cut off at the same speed as the feeding speed. This usage is applicable to packing machines and film manufacturing machines, for example.
The figure below shows the configuration of a film cutoff machine which detects the speed of film moving through its measure roll and cuts off film at the same speed as the feeding speed.

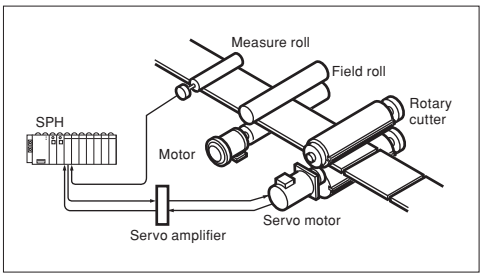

• Flying shears control
Flying shears control refers to cutoff control regarding a cutoff section (cutter or press) containing ball screws or racks/pinions, by which materials that are continuously fed (iron plates, external wall materials, clay, etc.) are cut off at the same speed as the feeding speed. This usage is applicable to metalworking machines, tile manufacturing machines, and painting machines, for example.
The figure below shows the configuration of a tile manufacturing machine which detects the speed of clay moving through its measure roll and cuts off clay while synchronizing its rotating knife blade with the clay's speed.

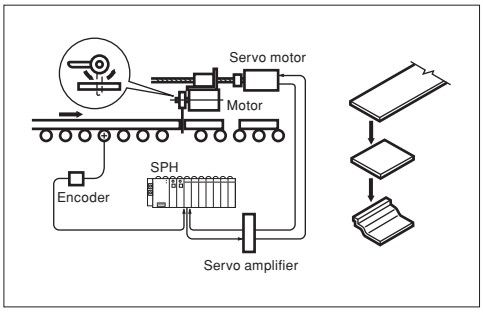

• Flying cutter control
Flying cutter control refers to cutoff control regarding a cutoff section (cutter or water jet) containing ball screws, racks/pinions, and chains by which materials that are continuously fed (film, paper, plastic, etc.) are cut off at a determined angle at the speed which is proportional to the feeding speed. This usage is applicable to board manufacturing machines, for example.
The figure below shows the configuration of a machine which detects the speed of paper or plastic moving through its encoder and cuts off the material by water jet synchronizing with the feeding speed of paper or plastic.

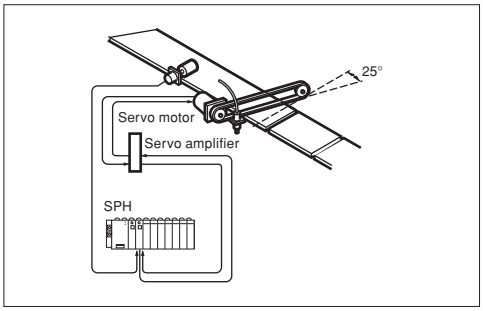

• VARICAM FB
This FB enables VARICAM functions. It detects the angle (current value of works) of the main axis of a machine and switches On and Off output signals of the set angle (work position) of the main axis.
This FB is applicable to a pulse train multiple positioning control module, analog multiple positioning control module, and pulse train output positioning control module.

Functional Extension FB Software

■Easily realizes functional extension by software
External fault diagnostic and adjustment system functions can also be implemented with software (an expansion FB) by using the enhanced processing functions of the CPU module. The software processing section is placed in the CPU section as an expansion FB and only the external equipment interface processing is separately performed in the I/O section. Thus, an optimum system can be configured according to the function of performance requirements.

■Diagnostic FB
Necessary diagnosis can be conducted only by selecting an extended FB for each diagnostic function. If this software is stored in the CPU module for control programs, it is unnecessary to add any other special function module. When it is used in the multi-CPU configuration, independence of the control CPU can also be preserved.
For notification of the diagnostic results to the external equipment, Ethernet or a network of general-purpose communication modules or equivalent can also be used.

• Extension FB which implement the malfunction diagnostic functions
The following diagnostic and data sampling FBs are available:
· Sequence/time diagnostic FB
· Time diagnostic FB
· Upper/lower limit diagnostic FB
· Data sampling FB

■PID FB
Instrumentation control and sequence control were conventionally separated with respect to both hardware and software. When packaged as an extended FB, this adjustment system computing function is a true linkage between instrumentation control and sequence control.
In addition, the restriction on the control loop count has sufficient expandability in a multi-CPU configuration. The number of FBs that can be stored in a CPU module is limited by the number of program steps and the sampling rate.

• Extension FB realizing the temperature regulation system
· ON/OFF control FB
· PID FB with auto-tuning

Programming Support Tool

Programming Support Tool: NP4H-SEDBV3 SX-Programmer Expert (D300win)

■Features

● Completely conforms to the IEC61131-3 International Standard

D300win supports five types of program representations completely conforming to the IEC61131-3 International Standard. It allows the programmer to code the proper combination of program representations for the control target.

● Supported representations

IL (Instruction List)
LD (Ladder Diagram)
FBD (Function Block Diagram)
ST (Structured Text)
SFC (Sequential Function Chart)

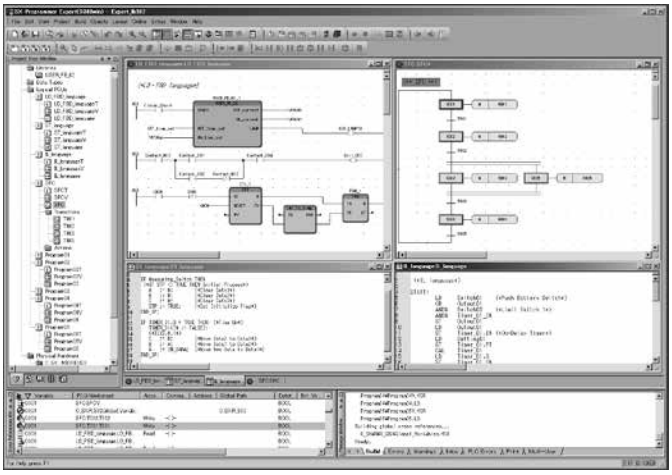

● Structured programming

Programming in units of POU or worksheets allows the use of the structured design method by which a program is created by dividing it by functionality or process.
This method enables multiple designers to divide the program design among them so that a substantial reduction in the program creation time can be achieved.

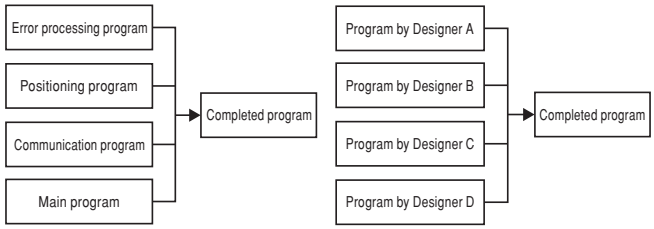

● Ladder programming using key operations (grid fixed method)

Ladder programming can be performed using familiar key operations:

- Standard display mode (variable only)
- Extended display mode (variable + AT specification address)
- All display mode (variable name + AT specification address + variable comment)

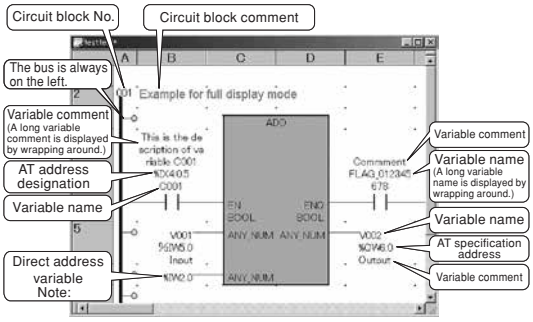

Note: If a direct address variable (= no variable name) is used, no variable comment is displayed, even if it is registered.

● Free description of programs and comments (Free editing style)

Programs can be described in any location on a worksheet to facilitate understanding of the processing relationships such as in linkage between the interlock condition and the sequence processing section/computing section, allowing efficient programming.
In addition, when a comment is described on a worksheet, the programmer can put a local comment for each circuit block as well as a comment in units of contacts, coils, or circuits, greatly contributing to ease of reading and understanding.

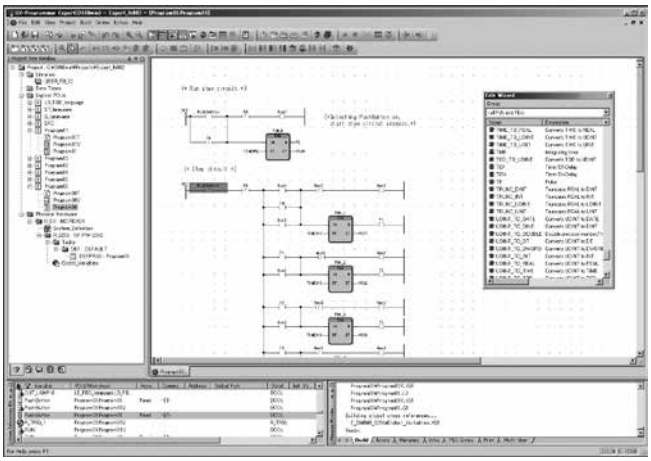

● Programming with variables (labels)

Differing from conventional programming, the Expert (D300win) Programming Support Tool uses label programming (addresses are automatically assigned) in which the address section is described like conventional comments, enabling program coding without being conscious of memory addressing. After the programming, any changes in address assignment can be accommodated by merely changing the corresponding label definition to update the program.

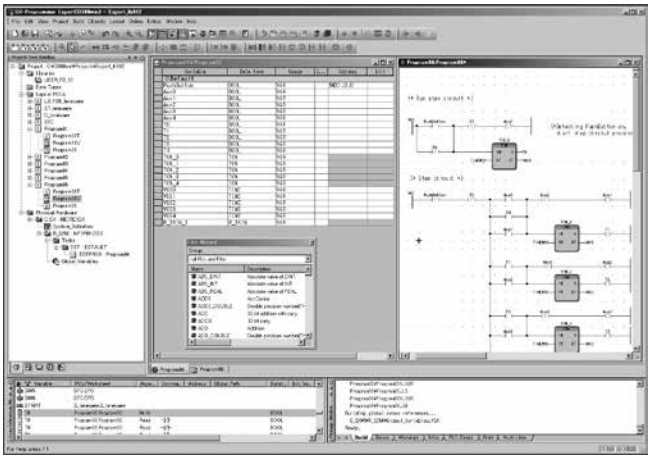

● Integrates user-original circuits into an FB

Frequently used routine programs or circuits can be integrated into an FB so that the programmer can easily reuse them. For FB generation, the user can select a language compatible with IEC61131-3 supported by Expert (D300win) instead of a special language.
This is also effective for circuit standardization or structuring if a single control block is integrated into an FB.

- FB internal program (LD/FBD language)

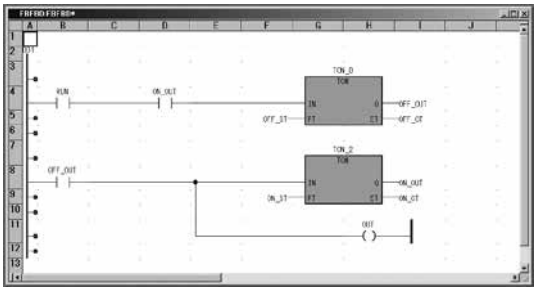

- When FB is used (FBD language)

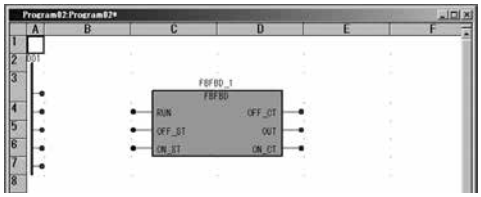

- FB internal program (ST language)

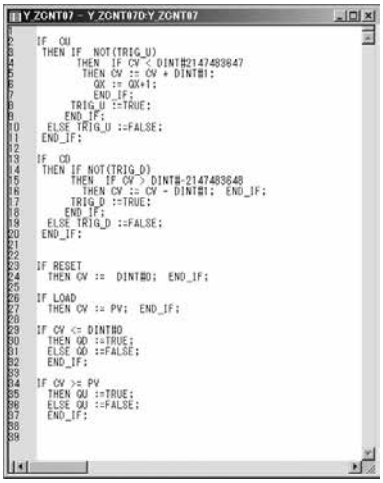

- When FB is used (FBD language)

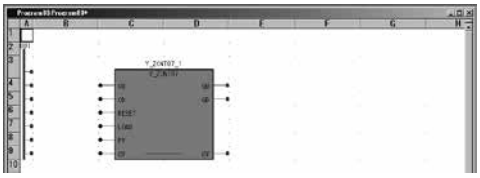

● Simulation function

This tool makes it possible to carry out a program logic test using the software PLC function for simulation built in Expert (D300win), without using the actual unit.
It performs operating simulation of a program written with a programming language conforming to IEC 61131-3. It enables forced ON/OFF and monitoring of any signal, and exhibits its ability to remarkably improve the programming and debugging efficiency for the SX Series.

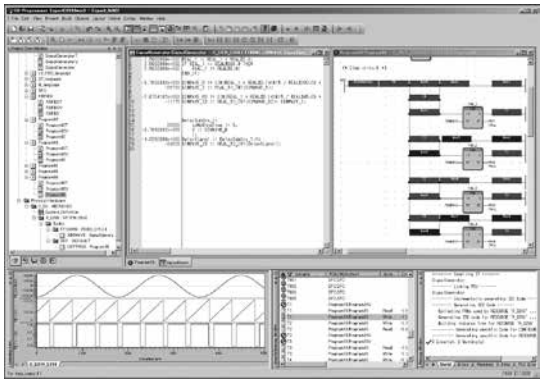

● Error & jump check function

The tool performs a program syntax check at the time of program compilation to detect syntax errors. It is possible to jump to an error position by double-clicking an error detection section. This function, together with the cross-reference function and data watch window function, exhibits its strengths in program correction and testing.

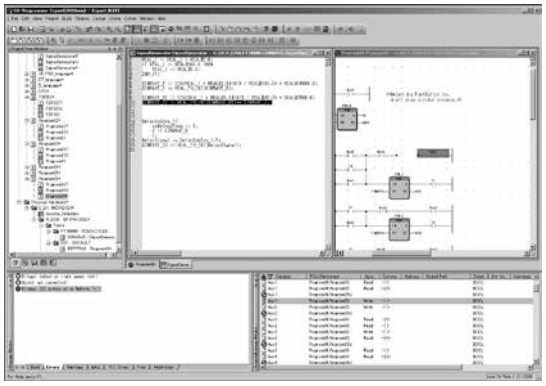

● Sampling trace

Sampling trace function saves variable (memory) data change during PLC is in RUN. It is possible to show sampling data on a sampling trace window as a graph. Sampling data is automatically saved with the project file. This saved sampling data can be exported as a CSV file (ASCII data).

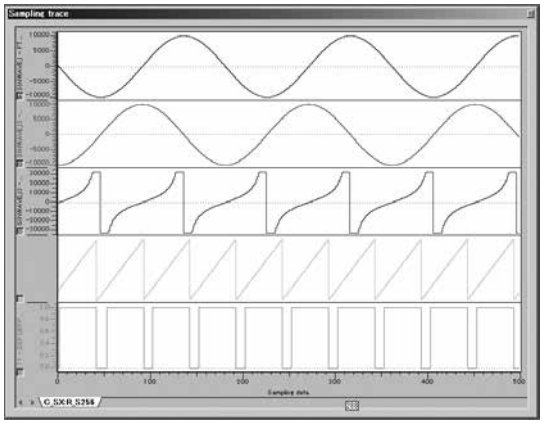

● Documentation function

The documentation preparation function has been substantially improved. Not only can it print drawing numbers, dates, page, and drawing borders, but also company logos and comments. It also augments the print preview function, which allows the user to verify the print state on the screen before beginning printing, and the scaled printing function which eliminates the need to select the paper size.

• Layout function

The layout function allows the user to print a program list in a free, user-original format. The created layout can be stored as a layout library, which can be used when necessary.

Frame creation:	Program list can be printed with frames. The frames can be freely designed facilitating reproduction of a conventionally used drawing sheet.
Company logo:	Company logo can be attached to a document. It is created as BMP data and pasted to the frames.
Drawing number:	Drawing number can be placed in a specified position within the frame.
Page number:	Page number can be placed in a specified position within the frame.
Comment:	Comments can be placed in a specified position within the frame.

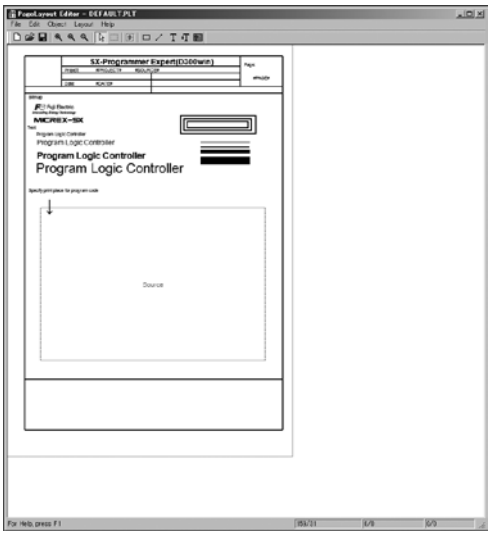

• Preview function

Use of the preview function before printing allows the user to verify the print image.

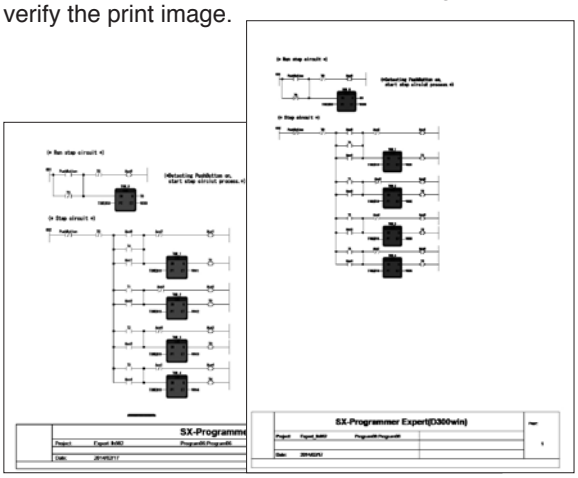

• Scaled printing

Documents can be printed in enlarged or reduced size. The paper size can be freely selected according to the purpose. The number of programs printed on a single sheet can be freely adjusted to provide uniform documentation.

● Function module support

The function module support (built-in each extended FB software package) has been realized as a common support tool. Thus, a dedicated loader is not required.

• Sharing program definitions including variable names

Labels and files defined/created with the Expert (D300win) programming support tool can be used as they are from the function module support tool. This makes it possible to not only reduce the programming workload, but also unify management of programs.

• Sharing the support tool connection port

The function module support tool can be used even when the IEC programming support tool remains connected to the CPU module (without being connected to the function module). The support function can be used only by starting the function module support tool. Parameter transmission between the CPU module and the function module is carried out by the extended FB.

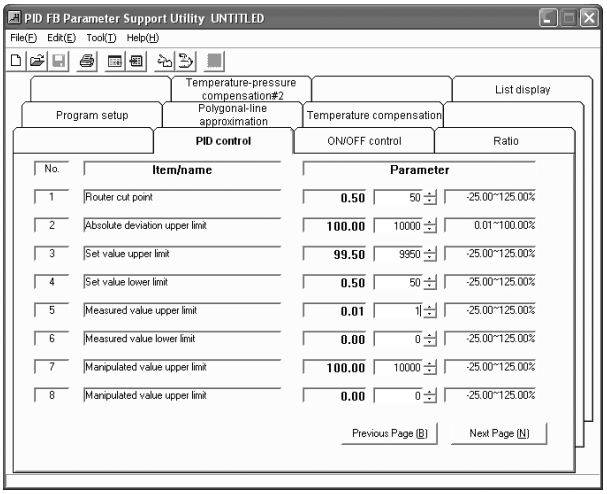

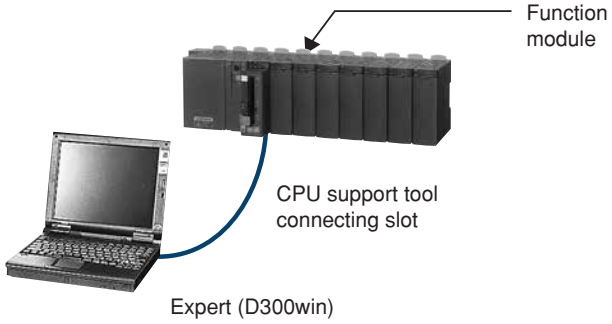

● HMI linkage function

Screen creation for the Programmable Operation Display (POD) can be performed using variable names set with Expert (D300win).

• HMI screen creation software

HMI screen creation software and Expert (D300win) run on a personal computer, which is the common platform.

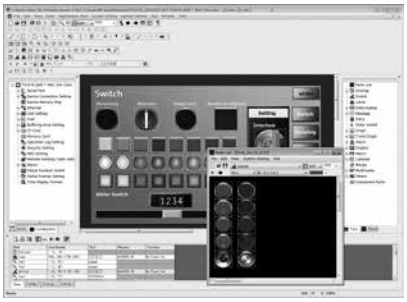

Programming Support Tool Expert (D300win)

● **Multi-user support**
A development environment that allows multiple users to simultaneously access a source project and has a mechanism for exclusive access control is offered.
Exclusive control of projects is automatically performed by support tool operations.

- Management, registration, and creation of client projects with respect to a server project
- Check-in/check-out in units of POU

● **Compatible with a Japanese and English OS**
Compatible with a Japanese OS and English OS using the same format.

● **EtherCAT configurator**
Enables configuration of EtherCAT network by starting the EtherCAT configurator from Expert (D300win).

- Batch management of EtherCAT master and slave configuration with simple operations from the tree view
- Flexible system configurations with Fuji Electric original networks (SX bus, E-SX bus, T-link, etc.)

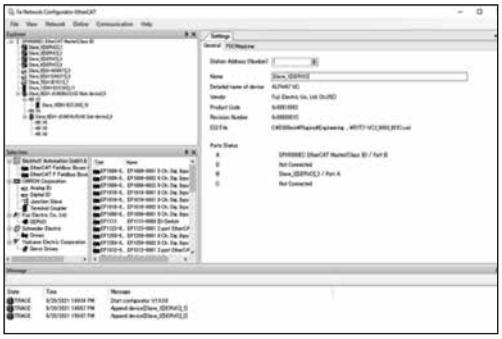

■Operating environment

Item		Specifications
Hardware		IBM-PC/AT compatible
CPU		Processor or SoC (at least 1 GHz)
Hard disk		Free space of 30 Gbytes or more
CD-ROM unit		1 unit (x 4 speed or faster), media: ISO 9660 format
Memory capacity		32-bit OS: 2 GB or more; 64-bit OS: 4 GB or more
Keyboard		109-key keyboard (or 101-key keyboard for English OS)
Mouse		USB mouse, bus mouse, or PS2 mouse
Indicator		800 x 600-dots resolution or higher (1024 x 768-dots resolution or higher recommended)
Communication interface	RS-232C	9600 to 57600 kbps (default setup according to resource model selection)
	Ethernet	Possible
	ISDN	Possible (analog port is used)
	USB	Possible with V1.1 (Target CPU: SPH300 (NP1PS- R), SPH300EX, SPH2000 and SPH3000)
	P/PE-link	Possible with V2.0
	SX bus	Possible
	FL-net	Possible
OS *1		Windows 7/8/8.1/10
Portability		Depends on commercial mobile personal computer.
Environmental durability		Depends on environmental conditions of commercial personal computer.

*1 Windows 10 (Ver. 1511 or higher) is required for the engineering of the SPH5000EC using the programing support tool.

■System configuration

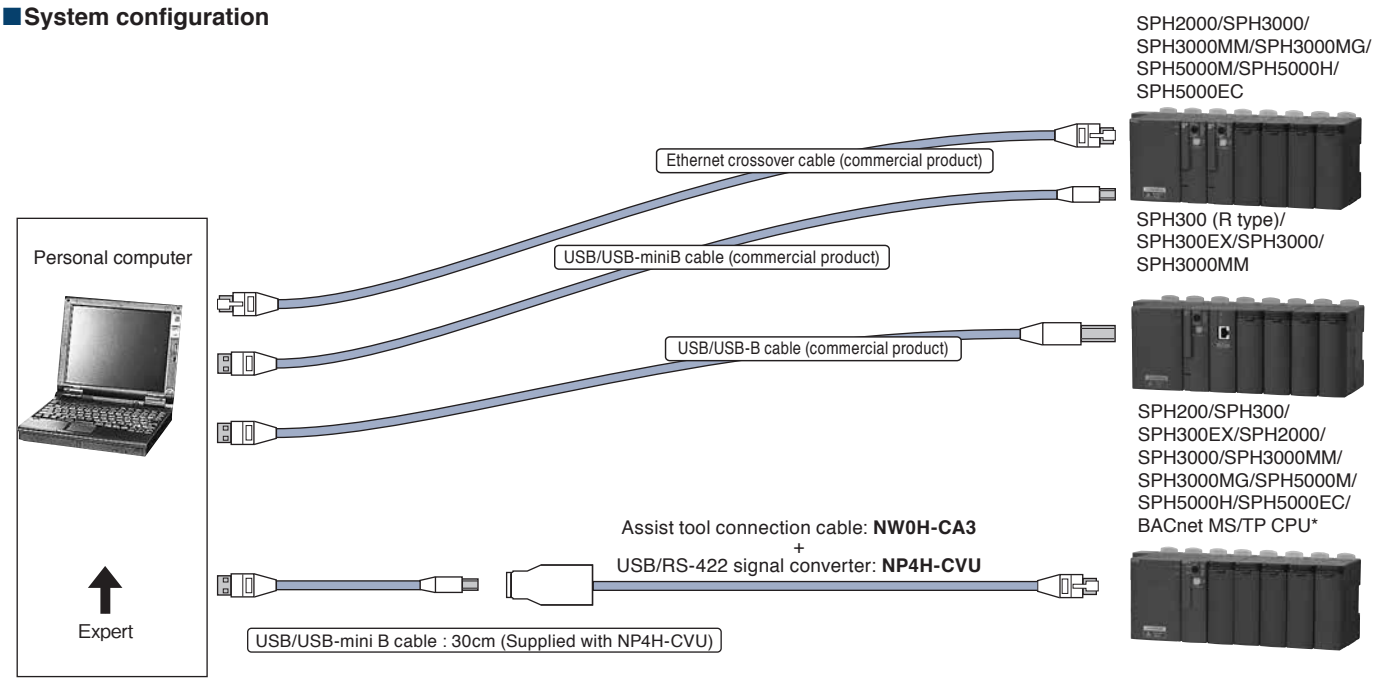

*Only for Japan's doemestic market

Programming Support Tool: NP4H-SWN SX-Programmer Standard

■Features

● Familiar user interface

The user interface and ladder programming support SPB programming equivalent to a FLEX-PC Windows-compatible PC loader.
Support for full-keyboard operation is also handy for on-site debugging and maintenance.

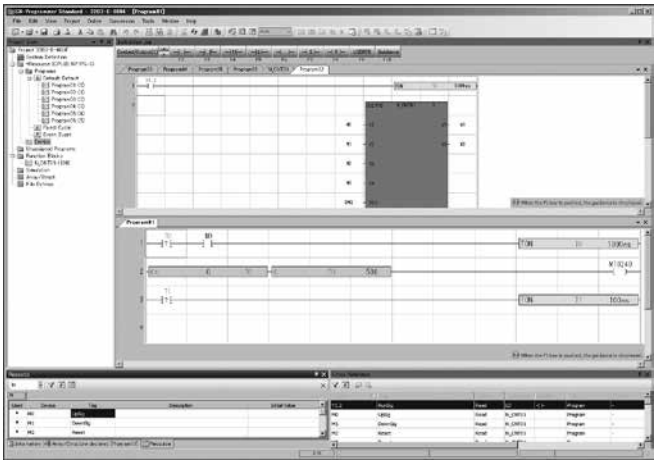

● Multi-language support

Program representations support the LD language, which is most standard. The ST and FBD programming languages are also supported. Programming in units of POU in which the structured design method is applicable can be performed.

● Intuitive screen operation

The easy-to-see and understandable layout enables you to intuitively operate the screen.

- Command word input is simplified by the command jog bar and the command word candidate narrow-down function based on a keyword search.
- Multiple sheet display and a flexible layout help improve operation efficiency.
- Input can be completed on a single screen because operands can be input in succession.
- Operation help corresponding to the screen displayed makes a manual no longer necessary.

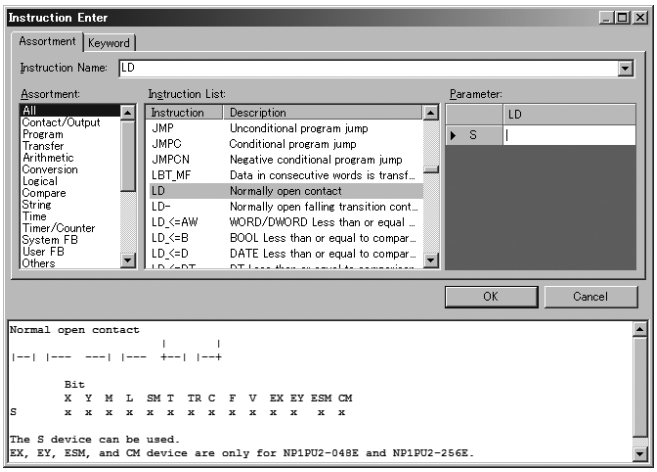

● Supports a variety of input methods

Standard supports three input methods, and you can select the optimum input method for the situation.

- Data can be input simply by operating the mouse wheel and clicking the mouse button. You can register any command words you desire.
- Even if you do not know a command word, you can easily narrow down command words through a keyword search.
- Candidates can be automatically displayed by mnemonic input mainly using the keyboard and the Intellisense function.

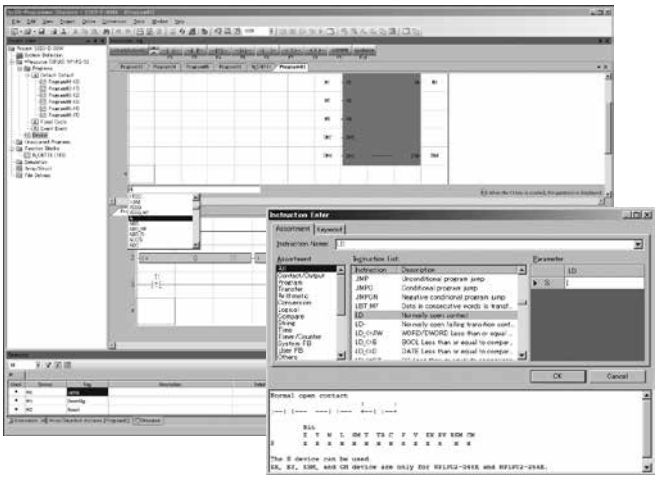

● Leverage your program assets

You can make good use of program assets for the MICREX-F and FLEX-PC series of our PLC. For circuits and commands not supported by Standard, alternative methods are described in the Help section.

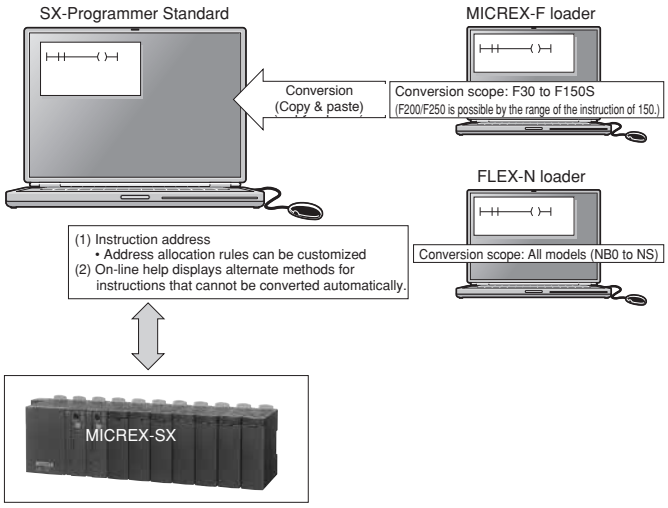

● Resume function

When the SPH starts to run, it automatically displays the position last edited or monitored.
When you go on-line, monitoring starts at the position you were monitoring last time.
When you are off-line, the system transitions to edit mode displaying the point you were editing last time.

● Password function

By setting an access authentication password for on-line functions, operation of the PLC can be limited to three levels, i.e., level 1, level 2, and level 3.

● Device editor

Device information is displayed on a single screen, for example, in the form of a list of the operating states of devices, enabling you to save time in memory management.

- Key operations are similar to those in Excel.
- All addresses can be displayed.
- The device editor not only displays the operating state of devices but also enables you to edit programs.

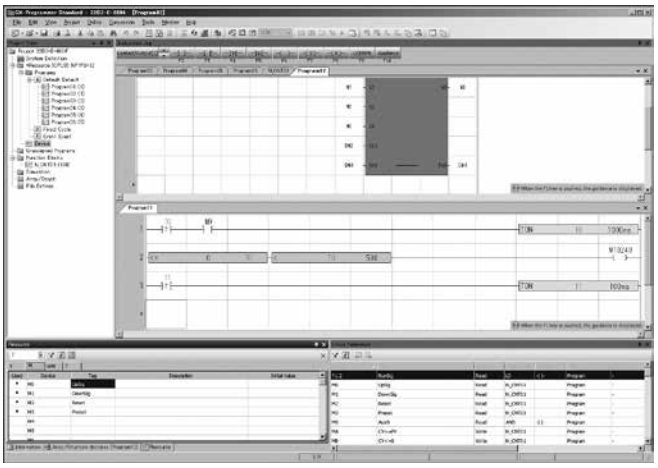

● Collation function

You can display details of different points on programs and edit by referring to collation results.

- You can quickly check different points with the aid of a filter display of collation results.
- You can edit a program while checking different points.
- With the Update button, programs can be promptly updated to the latest comparison results after editing.

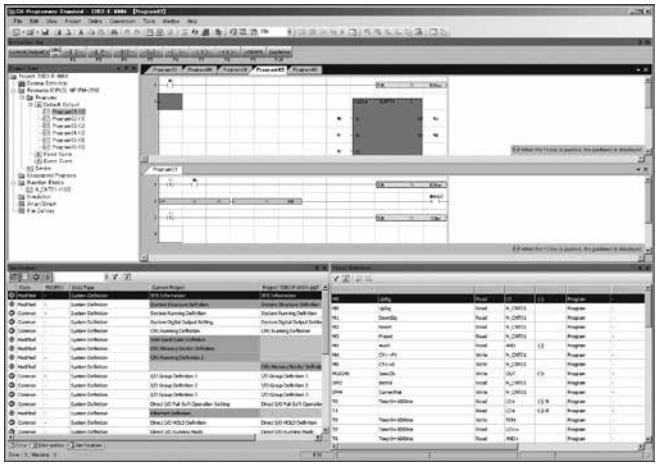

● Compatible with a Japanese and English OS

Compatible with a Japanese OS and English OS using the same format.

■Operating environment

Item		Specifications
Hardware		IBM-PC/AT compatible
CPU		Processor or SoC (at least 1 GHz)
Hard disk		Free space of 200 Mbytes or more
CD-ROM unit		1 unit (x 4 speed or faster), media: ISO 9660 format
Memory capacity		32-bit OS: 1 GB or more; 64-bit OS: 2 GB or more
Keyboard		109-key keyboard (or 101-key keyboard for English OS)
Mouse		USB mouse, bus mouse, or PS2 mouse
Indicator		800 x 600-dots resolution or higher (1024 x 768-dots resolution or higher recommended)
Communication interface	RS-232C	9600 to 57600 kbps (default setup according to resource model selection)
	Ethernet	Possible
	ISDN	Possible (analog port is used)
	USB	Possible with V1.1 (Target CPU: SPH300 (NP1PS-□□R), SPH300EX, SPH2000 and SPH3000)
	P/PE-link	Possible with V2.0
	SX bus	Possible
	FL-net	Possible
OS		Windows 7/8/8.1/10
Portability		Depends on commercial mobile personal computer.
Environmental durability		Depends on environmental conditions of commercial personal computer.

■System configuration

For information on how to connect Standard with PLC, refer to "System configuration" in Expert.

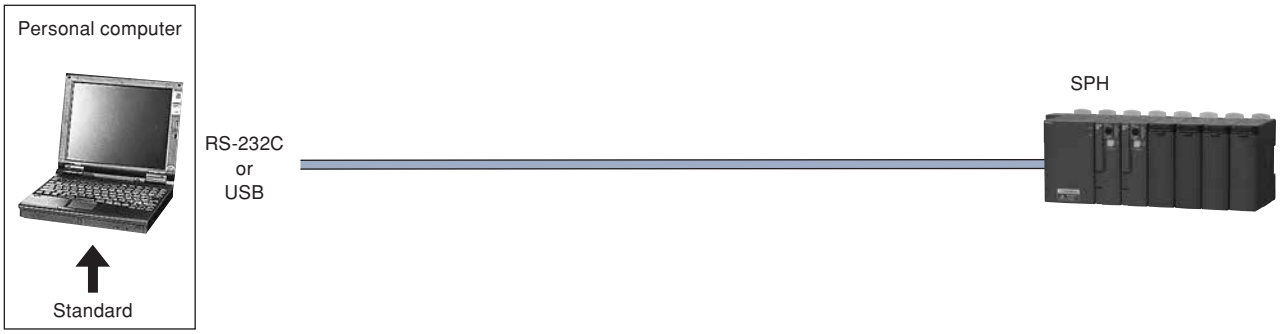

PCI-Bus-Based FL-net (OPCN-2) Ver. 2.0 Board: NP3L-FL3PCS

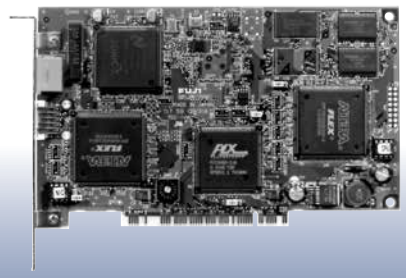

NP3L-FL3PCS
(Picture No. AF02-79)

■Features

- Two different communication functions by application
  With cyclic communication, this board supports both the common memory function, which allows each node to share the same data, and the message communication function, which exchanges only the necessary information when required.
- Large capacity common memory
  The capacity of the common memory is 8 Kbits and 8 Kwords.
- High reliability by the master-less method
  Since no master exists, participation and removal of each node can freely be performed without affecting communication of other nodes. The power of any node can be turned ON or OFF, allowing easy maintenance.

■Performance specifications

Performance and specifications of the built-in board type FL-net board NP3L-FL3PCS are equivalent to those of the module type NP1L-FL3.
For details on performance and specifications, refer to "FL-net (OPCN-2) Ver. 2.0 Module: NP1L-FL3" in this catalog.
This board conforms, however, only to the transmission specification 10BASE-T, 100BASE-TX, and not to 10BASE5.

■Operating environment

Item	Specifications
Hardware	IBM-AT compatible *1
CPU	Intel Pentium 233 MHz or higher
Hard disk	Free space of 10 Mbytes or more (and necessary disk capacity for Expert (D300win))
CD-ROM unit	1 unit (x 4 speed or faster), media: ISO 9660 format
Memory capacity	64 Mbytes or more (256 Mbytes or more recommended for Expert (D300win) operation)
Keyboard	101 English keyboard
Mouse	USB mouse, bus mouse, or PS2 mouse
Indicator	800 x 600-dots resolution or higher
OS	Windows2000/XP/NT 4.0/7
Environmental durability	Depends on environmental conditions of commercial personal computer.
Language for user application software development	Microsoft Visual Basic Microsoft Visual C++
Communication protocol	TCP/IP protocol
Weight	Approx. 140 g

*1 The board size supports a full-size PCI slot (For more information, refer to the Dimensions “PCI-bus based board” in this catalog).

PCI-Bus-Based LE-net Loop 2 Board: NP3L-LL2PCS

■Features

- LE-net is an original network of Fuji Electric. It is a low-priced link board between processors to conduct communication with other nodes connected to the LE-net.
- Broadcast communication and message communication can be conducted.
- The LE-net can be connected either as a multi-drop network or a single loop redundant wiring network. The loop network includes a loop-2 network in which the user data send/ receive area is extended. For this board, the loop-2 mode has been adopted.
- If the transmission line is broken, a transmission error occurs in a multi-drop network, but in a loop network, data communication between nodes can continue. This enables construction of a highly reliable system at a relatively low cost.

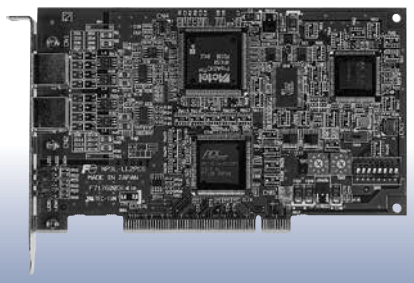

NP3L-LL2PCS
(Picture No. KD04-018)

- Since this board uses the loop-2 mode, LE-net loop-2 modules can be connected to the same system.

■Performance specifications

Performance and specifications of the built-in board type LE-net loop 2 board NP3L-LL2PCS are equivalent to those of the module type NP1L-LL2.
However, the board cannot be made redundant.

For details of performance and specifications, refer to "LE-net loop 2 Module: NP1L-LL2" in this catalog.

■Operating environment

Item	Specifications
Hardware	IBM-AT compatible*1
CPU	Intel Pentium 300 MHz or higher
Hard disk	Free space of 10 Mbytes or more
CD-ROM unit	1 unit (x 4 speed or faster), media: ISO 9660 format
Memory capacity	128 Mbytes or more recommended
Keyboard	101 English keyboard
Mouse	USB mouse, bus mouse, or PS2 mouse
Indicator	800 x 600-dots resolution or higher
OS	Windows2000/XP/NT 4.0
Environmental durability	Depends on environmental conditions of commercial personal computer.
Language for user application software development	Microsoft Visual Basic Microsoft Visual C++
Communication protocol	TCP/IP protocol
Weight	Approx. 130 g

*1 The board size supports a full-size PCI slot (For more information, refer to the Dimensions “PCI-bus based board” in this catalog).

Renewal Tool: NP8RE□□□-□□

■Outline

This renewal tool (I/O terminal conversion unit) makes the MICREX-F F250, F120-F150S, F120H/F80H, F70, F55, and FLEX-PC NJ series I/O wiring usable with MICREX-SX series units as they are.

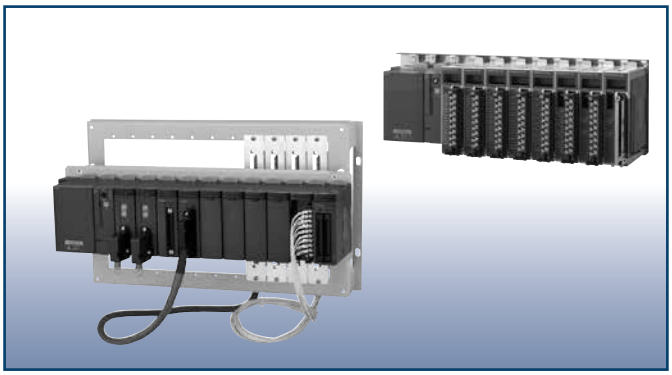

■Features

- Significantly reduced I/O wiring work
  Since I/O wiring is usable as it is, wiring work and checking can be omitted, and wiring work time can be significantly reduced to 1/5.
- Speedy board modifications on site
  The dimensions of the frame of the renewal tool are the same as those of the MICREX-F series base board. You do not have to perform any on-site additional work such as drilling.
- Easy mounting and replacement, easy checking of state indication LEDs
  SX series modules are designed to be mounted on the renewal tool and can be replaced with a single motion. The state indication LEDs can also be checked.
- Flexible layout
  SPH modules can be mounted not only on but also beside and above the renewal tool. You can arrange them any way that you wish according to the field layout.

■Model list

- MICREX-F F250/F120S/F140S/F150S/F120H/80H series compatible

Name	Model	Specification outline
Frame set (SPH mounting board + base unit)	**NP8REFSS-02**	NP8REFSB-02 x 1 unit, NP8REFSF-02 x 1 unit
	NP8REFSS-04	NP8REFSB-04 x 1 unit, NP8REFSF-04 x 1 unit
	NP8REFSS-06	NP8REFSB-06 x 1 unit, NP8REFSF-06 x 1 unit
	NP8REFSS-08	NP8REFSB-08 x 1 unit, NP8REFSF-08 x 1 unit
SPH mounting board	**NP8REFSF-02**	Base unit for NP8REFSF-02 (spacer, screw, washer, and nut included, four pieces each)
	NP8REFSF-04	Base unit for NP8REFSF-04 (spacer, screw, washer, and nut included, four pieces each)
	NP8REFSF-06	Base unit for NP8REFSF-06 (spacer, screw, washer, and nut included, four pieces each)
	NP8REFSF-08	Base unit for NP8REFSF-08 (spacer, screw, washer, and nut included, four pieces each)
Base unit (Unit for mounting conversion adapter)	**NP8REFSB-02**	Attachable base: For FSB084H
	NP8REFSB-04	Attachable base: For FSB124H, FSB086H
	NP8REFSB-06	Attachable base: For FSB126H, FSB088H
	NP8REFSB-08	Attachable base: For FSB128H, FSB156S-2, FSB154S-4, FSB110H
Conversion adapter	**NP8REFSA-204**	20-pole terminal block, for DC signals
	NP8REFSA-202	20-pole terminal block, for AC signals
	NP8REFSA-384	38-pole terminal block, for DC signals
	NP8REFSA-382	38-pole terminal block, for AC signals
Conversion cable (Cable length: 600 mm) (NP8REFSC-324W1 only: 200 mm)	**NP8REFSC-164X1**	16 points, for DC input (SPH side: Terminal block)
	NP8REFSC-164Y1	16 points, for DC output (SPH side: Terminal block)
	NP8REFSC-164Y2	16 points, for DC output (SPH side: Terminal block)
	NP8REFSC-162W1	For both input and output, for analog signals (SPH side: Terminal block)
	NP8REFSC-324X1	For DC input (SPH side: Terminal block)
	NP8REFSC-324X2	For DC input (SPH side: Connector)
	NP8REFSC-324Y1	32 points, for DC output (SPH side: Connector)
	NP8REFSC-324W2	32 points, for DC output (SPH side: Connector)
	NP8REFSC-164W1	16 points, for relay independent-output (SPH side: Terminal block)
	NP8REFSC-324W1	32 points, for both input and output (SPH side: Connector) (Cable length: 200 mm)
	NP8REFSC-322X1	32 points, for AC input (SPH side: Terminal block)
	NP8REFSC-322Y1	32 points, for AC output (SPH side: Terminal block)

- MICREX-F series base compatible base units, SPH base boards, and number of conversion adapter attachments

Base (MICREX-F)	Base unit (frame set)	Usable MICREX-SX SPH base board	Number of conversion adapter attachments
FSB084H	NP8REFSB-02 (NP8REFSS-02)	NP1BS-06	Max. 5 units
FSB124H FSB086H	NP8REFSB-04 (NP8REFSS-04)	NP1BS-06, NP1BS-08, NP1BS-08S, NP1BS-08D	Max. 7 units
FSB126H FSB088H	NP8REFSB-06 (NP8REFSS-06)	NP1BS-06, NP1BS-08, NP1BS-08S, NP1BS-08D	Max. 9 units
FSB128H, FSB156S-2 FSB154S-4, FSB110H	NP8REFSB-08 (NP8REFSS-08)	NP1BS-08, NP1BS-08S, NP1BS-11, NP1BS-11S, NP1BS-13, NP1BS-13S	Max. 11 units

For details, refer to the User's Manual "Renewal Tool NP8REFS Series" (Manual No. FEH320).

Compatible I/O module, conversion adapter, and conversion cable

Types	Relevant PLC type		Conversion adapter	Conversion cable	I/O No. of points
	MICREX-F	MICREX-SX			
Input	**FTU110B, FTU113B**	**NP1X1606-W**	NP8REFSA-204	NP8REFSC-164X1	16 points
	FTU130B, FTU133B	**NP1X1607-W**	NP8REFSA-204	NP8REFSC-164X1	16 points
	FTU150B	**NP1X1610**	NP8REFSA-202	NP8REFSC-162W1	16 points
	FTU160B	**NP1X1611-RI**	NP8REFSA-202	NP8REFSC-162W1	16 points
	FTU135C, FTU136C	**NP1X1607-W × 2 units**	NP8REFSA-384	NP8REFSC-324X1	32 points
	FTU155C	**NP1X1610 × 2 units**	NP8REFSA-382	NP8REFSC-322X1	32 points
	FTU165C	**NP1X1611-RI × 2 units**	NP8REFSA-382	NP8REFSC-322X1	16 points
	FTU120C, FTU123C	**NP1X3202-W** **NP1X3206-W**	NP8REFSA-384	NP8REFSC-324X2	32 points
	FTU121C, FTU122C	**NP1X3202-W**	NP8REFSA-384	NP8REFSC-324X2	32 points
	FTU127C	**NP1X3202-W NP1X3206-W**	-	NP8REFSC-324W1	32 points
	FTU125A, FTU126A	**NP1X6406-W**	-	NP8REFSC-324W1 (Two needed)	64 points
	FTU140B	**NP1X0805**	NP8REFSA-202	NP8REFSC-082X1	8 points
	FTU143B	**NP1X0805**	NP8REFSA-202	NP8REFSC-082X1	8 points
Output	**FTU210B**	**NP1Y16T09P6** **NP1Y16T10P2**	NP8REFSA-204	NP8REFSC-164Y1	16 points
	FTU211B	**NP1Y16T09P6** **NP1Y16T10P2**	NP8REFSA-204	NP8REFSC-164Y1	16 points
	FTU212B	**NP1Y16T09P6**	NP8REFSA-204	NP8REFSC-164Y1	16 points
		NP1Y16T10P2	NP8REFSA-204	NP8REFSC-164Y1	16 points
	FTU213B	**NP1Y16T09P6**	NP8REFSA-204	NP8REFSC-164Y1	16 points
	FTU215B, FTU216B	**NP1Y16U09P6**	NP8REFSA-204	NP8REFSC-164Y2	16 points
	FTU250B, FTU251B	**NP1Y16R-08**	NP8REFSA-202	NP8REFSC-162W1	16 points
	FTU260B, FTU262B	**NP1Y16R-08**	NP8REFSA-202	NP8REFSC-162W1	16 points
	FTU263B	**NP1Y08R-00 × 2 units**	NP8REFSA-382	NP8REFSC-164W1	16 points
	FTU257B, FTU258B	**NP1Y16R-08 × 2 units**	NP8REFSA-382	NP8REFSC-322Y1	32 points
	FTU266B, FTU267B	**NP1Y16R-08 × 2 units**	NP8REFSA-382	NP8REFSC-322Y1	32 points
	FTU221C, FTU223B **FTU224B, FTU233B**	**NP1Y32T09P1**	NP8REFSA-384	NP8REFSC-324Y1	32 points
	FTU226B	**NP1Y32U09P1**	NP8REFSA-384	NP8REFSC-324Y1	32 points
	FTU227C	**NP1Y32T09P1**	-	NP8REFSC-324W1	32 points
	FTU222A	**NP1Y64T09P1**	-	NP8REFSC-324W1 (Two needed)	64 points
Input/output mixed	**FTU611C**	**NP1W3206T**	NP8REFSA-384	NP8REFSC-324W2	32 points
	FTU612A	**NP1W6406T**	-	NP8REFSC-324W1 (Two needed)	64 points
Analog input	**FTU340A-FTU343A**	**NP1AXH8V-MR**	NP8REFSA-202	NP8REFSC-162W1	8 points
	FTU344A	**NP1AXH8I-MR**	NP8REFSA-202	NP8REFSC-162W1	8 points
Analog output	**FTU440A-FTU443A**	**NP1AYH8V-MR**	NP8REFSA-202	NP8REFSC-162W1	8 points

For details, refer to the User's Manual "Renewal Tool NP8REFS Series" (Manual No. FH320).

• MICREX-F F70 series compatible

Name	Model	Specification outline
Base adapter	**NP8RE70B-02**	For NC1B02 (Mounting screws included)
	NP8RE70B-04	For NC1B04, NC1B02 (Mounting screws included)
	NP8RE70B-06	For NC1B06, NC1B04, NC1B02 (Mounting screws included)
	NP8RE70B-08	For NC1B8, NC1B06, NC1B04 (Mounting screws included)
	NP8RE70B-10	For NC1B10, NC1B08, NC1B06 (Mounting screws included)
Conversion adapter	**NP8RE70A-201**	16 points, for DC input/output (Terminal cover included)
	NP8RE70A-202	16 points, for AC input/output (Terminal cover included)
	NP8RE70A-203	8 points, for relay independent-output (Terminal cover included)
	NP8RE70A-204	2 points/ 4 points, for analog input (Terminal cover included)
	NP8RE70A-205	2 points, for analog output (Terminal cover included)
	NP8RE70A-401	32 points, for DC input/output
	NP8RE70A-402	64 points, for DC input/output

• MICREX-F series base compatible base units and SPH base boards

Base (MICREX-F)	Base adapter	Usable MICREX-SX SPH base board
NC1B02	NP8RE70B-02	3-slot base board
NC1B02, NC1B04	NP8RE70B-04	6-slot base board
NC1B02, NC1B04, NC1B06	NP8RE70B-06	8-slot base
NC1B04, NC1B06, NC1B08	NP8RE70B-08	8/11-slot base
NC1B06, NC1B08, NC1B10	NP8RE70B-10	11/13-slot base

• Compatible I/O module and conversion adapter

Types	Relevant I/O module type		Conversion adapter	No. of I/O points
	MICREX-F	MICREX-SX		
Input	**NC1X1604 (at 24 V DC)**	**NP1X1606-W** *1	NP8RE70A-201	16 points
	NC1X1604-W (at 24 V DC)	**NP1X1606-W** *1	NP8RE70A-201	16 points
	NC1X1610	**NP1X1610-RI**	NP8RE70A-202	16 points
	NC1X1611	**NP1X1611-RI**	NP8RE70A-202	16 points
	NC1X3202-W	**NP1X3202-W**	NP8RE70A-401	32 points
	NC1X3204	**NP1X3206-W (at 24 V DC)**	NP8RE70A-401	32 points
	NC1X3204-3	**NP1X3206-W (at 24 V DC)**	NP8RE70A-401	32 points
	NC1X3206	**NP1X3206-W**	NP8RE70A-401	32 points
	NC1X3206-S	**NP1X3206-W**	NP8RE70A-401	32 points
	NC1X6404	**NP1X6406-W**	NP8RE70A-402	64 points
	NC1X6406	**NP1X6406-W**	NP8RE70A-402	64 points
	NC1X6406-S	**NP1X6406-W**	NP8RE70A-402	64 points
	NC1X6406-W	**NP1X6406-W**	NP8RE70A-402	64 points
Output	**NC1Y16R-08**	**NP1Y16R-08**	NP8RE70A-201	16 points

Types	Relevant I/O module type			Conversion adapter	No. of I/O points
	MICREX-F	MICREX-SX			
	NC1Y16T05P5-1	**NP1Y16T09P6**		NP8RE70A-201	16 points
	NC1Y16U05P5-1	**NP1Y16U09P6**		NP8RE70A-201	16 points
	NC1Y16S	**NP1Y16R-08**	*2	NP8RE70A-202	16 points
	NC1Y08R-00	**NP1Y08R-00**		NP8RE70A-203	8-point relay-independent
	NC1Y32T05P1	**NP1Y32T09P1**	*3	NP8RE70A-401	32 points
	NC1Y32U05P1	**NP1Y32U09P1**	*3	NP8RE70A-401	32 points
	NC1Y64T05P1-1	**NP1Y64T09P1**	*3	NP8RE70A-402	64 points
Input/output mixed	**NC1W6406T**	**NP1W6406T**	*3	NP8RE70A-402	64 points
Analog input	**NC1AX04-MR**	**NP1AXH4-MR**		NP8RE70A-204	4 points
Analog output	**NC1AY02-MR**	**NP1AYH2-MR**		NP8RE70A-205	2 points

*1 This renewal tool is unusable when the signal level is at 12 V DC.
*2 The output element is changed from the SSR to the relay.
*3 It does not support 5 V DC.
For details, refer to the User's Manual "Renewal Tool for F55/F70 Series" (Manual No. FH323).

• MICREX-F F55 series compatible

Name	Model	Specification outline
Base adapter	**NP8RE55B-04**	For NV1P-042, NV1P-044, NV1E-042, NV1E-044 (Mounting screws included)
	NP8RE55B-06	For NV1P-062, NV1P-064, NV1E-062, NV1E-064 (Mounting screws included)
	NP8RE55B-08	For NV1P-082, NV1P-084, NV1E-082, NV1E-084 (Mounting screws included)
	NP8RE55B-08L	For NV1P-082, NV1P-084, NV1E-082, NV1E-084 (Mounting screws included)
Conversion adapter	**NP8RE55A-181**	16 points, for DC input and relay output (8 points x 2 common)
	NP8RE55A-182	16 points, for DC output
	NP8RE55A-183	8 points, for relay independent-output
	NP8RE55A-184	8 points, for AC input
	NP8RE55A-185	8 points, for SSR output
	NP8RE55A-186	4 points, for analog input
	NP8RE55A-187	2 points, for analog voltage output
	NP8RE55A-188	2 points, for analog current output
	NP8RE70A-401	32 points, for DC input/output
	NP8RE55A-402	32 points, for DC input/output

MICREX-F series base compatible base units and SPH base boards

Base (MICREX-F)	Base adapter	Usable MICREX-SX SPH base board
NV1P-042, NV1P-044, NV1E-042, NV1E-044	NP8RE55B-04	NP1BS-06
NV1P-062, NV1P-064, NV1E-062, NV1E-064	NP8RE55B-06	NP1BS-08, NP1BS-08S
NV1P-082, NV1P-084, NV1E-082, NV1E-084	NP8RE55B-08	NP1BS-11, NP1BS-11S
	NP8RE55B-08L	NP1BS-13, NP1BS-13S

Compatible I/O module and conversion adapter

Types	Relevant I/O module type		Conversion adapter	No. of I/O points
	MICREX-F	MICREX-SX		
Input	**NV1X1604-W**	**NP1X1606-W**	NP8RE55A-181	16 points
	NV1X1604	**NP1X1606-W**	NP8RE55A-181	16 points
	NV1X1604-3	**NP1X1606-W**	NP8RE55A-181	16 points
	NV1X0811	**NP1X0811**	NP8RE55A-184	8 points
	NV1X0810	**NP1X0810**	NP8RE55A-184	8 points
	NV1X3204	**NP1X3206-W**	NP8RE70A-401	64 points where 32 points x 2
	NV1X3204 ×2	**NP1X6406-W**		
	NV1X3206	**NP1X3206-W**		
	NV1X3206 ×2	**NP1X6406-W**		
	NV1X3204-W	**NP1X3206-W**		
	NV1X3204-W ×2	**NP1X6406-W**		
Output	**NV1Y16R-08**	**NP1Y16R-08**	NP8RE55A-181	16 points
	NV1Y16T05P5	**NP1Y16T09P6**	NP8RE55A-182	16 points
	NV1Y16U05P5	**NP1Y16U09P6**	NP8RE55A-182	16 points
	NV1Y08R-00	**NP1Y08R-00**	NP8RE55A-183	8 points
	NV1Y08S	**NP1Y08S**	NP8RE55A-185	8 points
	NV1Y32T05P1	**NP1Y32T09P1**	Case where NP8RE70A-401 x 2 NP8RE70A-402	Case where 32 points x 2 64 points
	NV1Y32T05P1 ×2	**NP1Y64T09P1**		
Analog input	**NV1AX04-MR**	**NP1AX04-MR**	NP8RE55A-186	4 points
Analog output	**NV1AY02V-MR**	**NP1AY02-MR**	NP8RE55A-187	2 points
	NV1AY02I-MR	**NP1AY02-MR**	NP8RE55A-188	2 points

For details, refer to the User's Manual "Renewal Tool for F55/F70 Series" (Manual No. FH323).

• FLEX-PC NJ series compatible

Name	Model	Specification outline
Base adapter	**NP8RENJB-03**	For NJ-BP3, NJ-BE3 (Mounting screws included)
	NP8RENJB-05	For NJ-BP5, NJ-BT5, NJ-BE5 (Mounting screws included)
	NP8RENJB-08	For NJ-BP8, NJ-BT8, NJ-BE8 (Mounting screws included)
	NP8RENJB-08L	For NJ-BP8, NJ-BT8, NJ-BE8 (Mounting screws included)
Conversion adapter	**NP8RENJA-181**	16 points, for DC input and relay output (Mounting brackets, one conversion PC board, terminal labels, junction connectors included)
	NP8RENJA-182	16 points, for DC output (Mounting brackets, one conversion PC board, terminal labels, junction connectors included)
	NP8RENJA-183	8 points, for relay output (Mounting brackets, one conversion PC board, terminal labels, junction connectors included)
	NP8RENJA-184	For multi-range analog input (Mounting brackets, one conversion PC board, terminal labels, junction connectors included)
	NP8RENJA-185	For multi-range analog output (Mounting brackets, one conversion PC board, terminal labels, junction connectors included)
	NP8RENJA-241	32 points, for DC input/output (One conversion PC board included)
	NP8RENJA-242	32 points, for DC input/output of two units (Two conversion PC boards included)

NJ series base compatible base units and SPH base boards

Base (FLEX-PC)	Base adapter	Usable MICREX-SX SPH base board
NJ-BP3 NJ-BE3	NP8RENJB-03	NP1BS-06
NJ-BP5 NJ-BT5 NJ-BE5	NP8RENJB-05	NP1BS-08, NP1BS-08S
NJ-BP8	NP8RENJB-08	NP1BS-11, NP1BS-11S
NJ-BT8 NJ-BE8	NP8RENJB-08L	NP1BS-13, NP1BS-13S

Compatible I/O module and conversion adapter

Types	Relevant I/O module type		Conversion adapter	No. of I/O points
	FLEX-PC NJ	MICREX-SX		
Input	**NJ-X16-1**	**NP1X1606-W**	NP8RENJA-181	16 points
	NJ-X16-1S	**NP1X1606-W**	NP8RENJA-181	16 points
	NJ-X16-4	**NP1X1610**	NP8RENJA-181	16 points
		NP1X1610-RI	NP8RENJA-181	16 points
	NJ-X16-5	**NP1X1611**	NP8RENJA-181	16 points
		NP1X1611-RI	NP8RENJA-181	16 points
	NJ-X32-1	**NP1X3206-W**	NP8RENJA-241	32 points
	NJ-X32-1 ×2	**NP1X6406-W**	x 2: NP8RENJA-242	32 points x 2
	NJ-X32-1S	**NP1X3206-W**	NP8RENJA-241	32 points
	NJ-X32-1S ×2	**NP1X6406-W**	x 2: NP8RENJA-242	32 points x 2
Output	**NJ-Y16-R16**	**NP1Y16R-08**	NP8RENJA-181	16 points
	NJ-Y16-SF1	**NP1Y16R-08**	NP8RENJA-181	16 points
	NJ-Y16-TF2	**NP1Y16T09P6**	NP8RENJA-182	16 points
	NJ-Y16-TF2S	**NP1Y16U09P6**	NP8RENJA-182	16 points
	NJ-Y8-R	**NP1Y08R-00**	NP8RENJA-183	8 points
	NJ-Y32-T1	**NP1Y32T09P1**	NP8RENJA-241	32 points
	NJ-Y32-T1 ×2	**NP1Y64T09P1**	x 2: NP8RENJA-242	32 points x 2
	NJ-Y32-T1S	**NP1Y32U09P1**	NP8RENJA-241	32 points
	NJ-Y32-T1S ×2	**NP1Y64U09P1**	x 2: NP8RENJA-242	32 points x 2
Input/output mixed	**NJ-XY32-1**	**NP1W6406T**	NP8RENJA-241	32 points
	NJ-XY32-1 ×2		x 2: NP8RENJA-242	32 points x 2
	NJ-XY32-1SS	**NP1W6406U**	NP8RENJA-241	32 points
	NJ-XY32-1SS ×2		x 2: NP8RENJA-242	32 points x 2
Analog input	**NJ-AX4-MR**	**NP1AX04-MR**	NP8RENJA-184	4 points
Analog output	**NJ-AY2V-MR**	**NP1AYH4V-MR**	NP8RENJA-185	2 points
	NJ-AY4V-MR	**NP1AYH4V-MR**	NP8RENJA-185	4 points

Dimensions

- MICREX-F F250/F120S/F140S/F150S/F120H/80H series compatible

Mounting example with the frame set (base unit + SPH mounting board)

· Base unit (mounting 1 SX base unit)

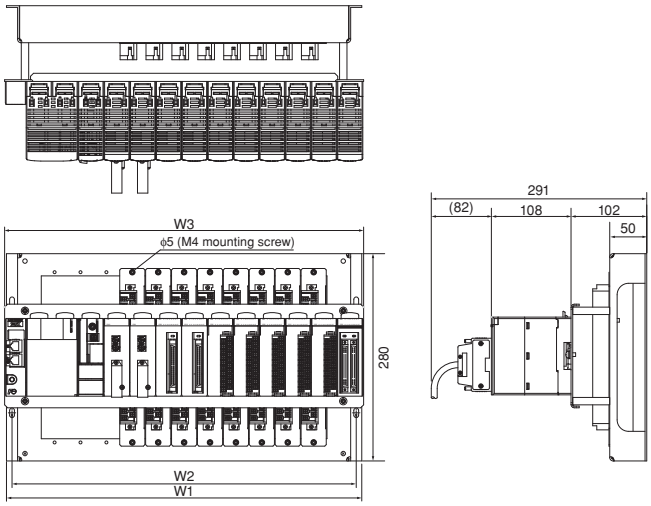

· Base unit (mounting 2 SX base units)

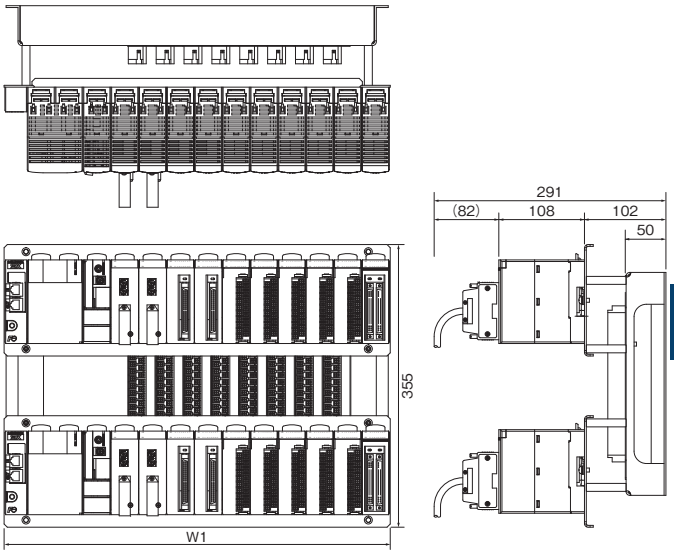

[Unit: mm]

			Frame set			
Model			NP8REFSS-08	NP8REFSS-06	NP8REFSS-04	NP8REFSS-02
Dimensions	W1	Mounting dimensions of base unit	480	407	334	261
	W2	Mounting dimensions of base unit	465	392	319	246
	W3	Outside dimensions of SPH mounting board	485	377	310	240

- MICREX-F F70 series compatible

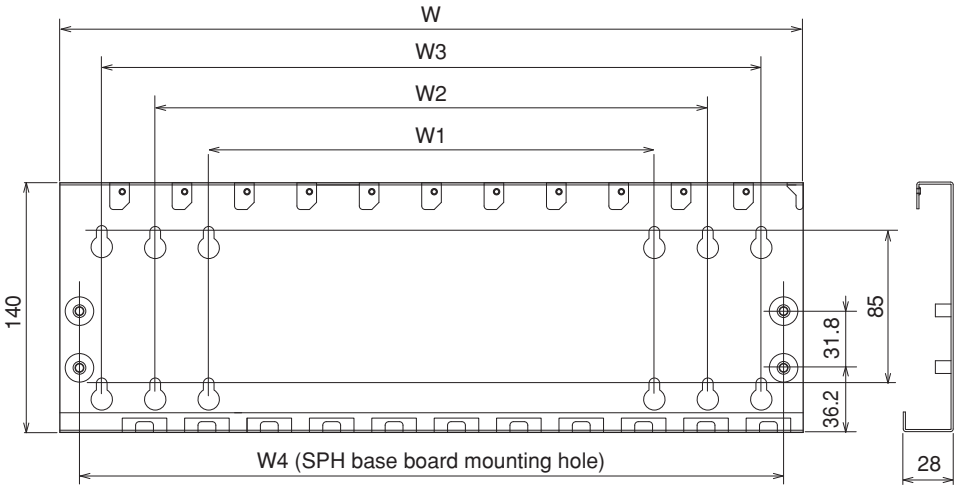

Base adapter type	Dimension (mm)				
	Width of the entire base adapter	F70 base mounting holes (Number of slots)			SX base mounting holes (Number of slots)
	W	W1	W2	W3	W4
NP8RE70B-02	207	189(2)	-	-	115(3)
NP8RE70B-04	277	189(2)	259(4)	-	220(6)
NP8RE70B-06	347	189(2)	259(4)	329(6)	290(8)
NP8RE70B-08	417	259(4)	329(6)	408(8)	395(11)
NP8RE70B-10	487	329(6)	408(8)	469(10)	465(13)

- MICREX-F F55 series compatible

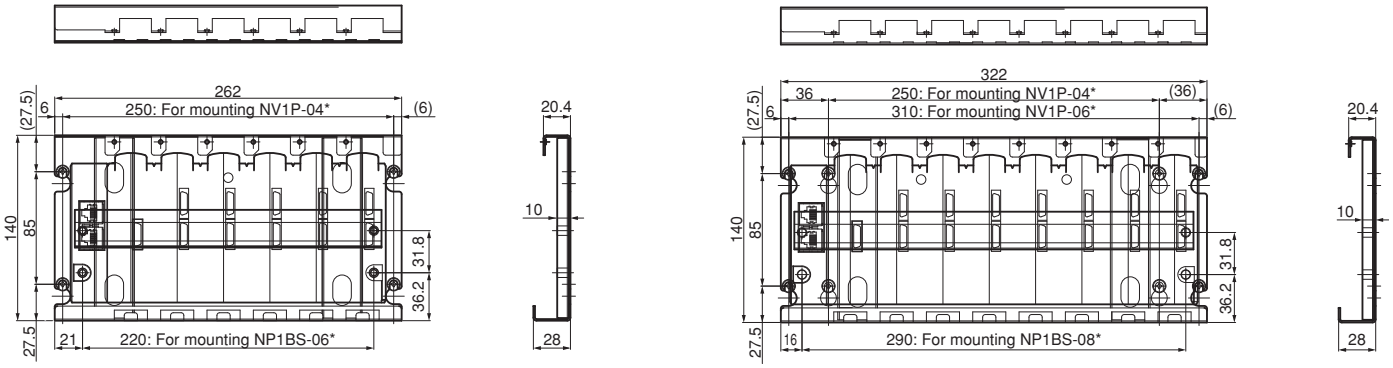

Base adapter type	Dimension (mm)		
	W	H	D
NP8RE55B-04	262	140	28
NP8RE55B-06	322	140	28
NP8RE55B-08	417	140	28
NP8RE55B-08L	487	140	28

- FLEX-PC NJ series compatible

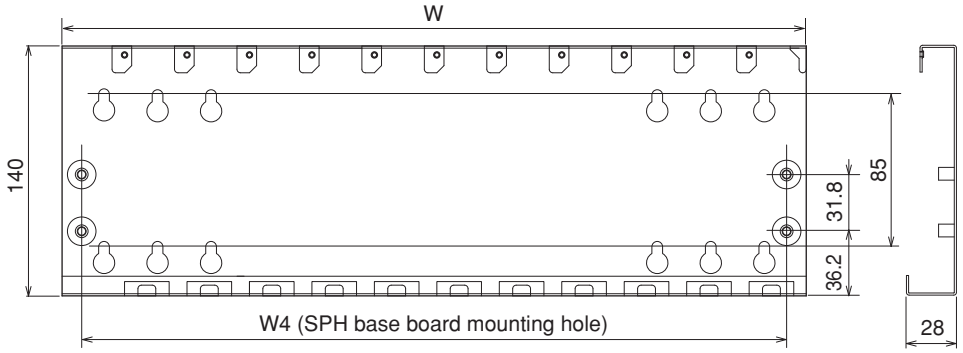

Base adapter type	Dimensions (mm)		
	W	H	D
NP8RENJB-03	250	140	28.6
NP8RENJB-05	326	140	28.6
NP8RENJB-08	439	140	28.6
NP8RENJB-08L	485	140	28.6

MICREX-F Size I/O Module (Renewal Tool): NP8□-□

■Outline

This module is an I/O module with a size equivalent to MICREX-F series FTU module. This renewal tool makes the MICREX-F F120-150S series I/O wirings usable with MICREX-SX series units as they are.

■Features

- No control panel modification is required
  The dimensions of the base board mounting hole for the control panel are the same as those of the MICREX-F series base board. Also, the depth length is minimized.
- No wiring change is required
  The same terminal block as one of the MICREX series FTU module is used, so the existing terminal block of the MICREX series can be connected as it is. Also, the electrical performance is inherited from the MICREX-F series.
- Easy module replacement and signal check
  The module placed on the front allows you to check signals regularly and to quickly replace the module in an emergency.
- Can be used as an extension unit in MICREX-F series system
  This module has a function allowing to logically change the bit order of terminal block signal wiring. MICREX-F processor modules can be replaced in T-link extension unit as they are.

■Specifications

- Input specifications

Item		Specifications		
Model		**NP8SX-113**	**NP8X-120**	**NP8X-123**
No. of input points (Common configuration)		16 points (8 points/common 2 circuits)	32 points (16 points/common 2 circuits)	
Rated voltage		12 to 24 V DC/AC	12 to 24 V DC/AC	12 to 24 V DC
Max. allowed voltage		30 V DC	26.4 V DC/AC	26.4 V DC
Input format		No polarity	No polarity	
Rated current		4mA (at 12 V DC), 10mA (at 24 V DC)	4mA (at 12 V DC), 10mA (at 24 V DC)	
Input impedance		2.2kΩ	2.2kΩ	
Standard operation range	OFF to ON	9.6 to 30 V	9.6 to 26.4 V	
	ON to OFF	0 to 5.5 V		
Input delay time	OFF to ON ON to OFF	3 ±1.5 ms (hard filter time) + (soft filter time) The soft filter time can be changed in the parameter settings. (OFF to ON) - (ON to OFF): None (default), 0.1-0.1 ms, 1-1 ms, 3-3 ms, 3-10 ms, 10-10 ms, 30-30 ms, 100-100 ms	10 ms (hard filter time) + (soft filter time) The soft filter time can be changed in the parameter settings. (OFF to ON) - (ON to OFF): None (default), 0.1-0.1 ms, 1-1 ms, 3-3 ms, 3-10 ms, 10-10 ms, 30-30 ms, 100-100 ms	3 ±1.5 ms (hard filter time) + (soft filter time) The soft filter time can be changed in the parameter settings. (OFF to ON) - (ON to OFF): None (default), 0.1-0.1 ms, 1-1 ms, 3-3 ms, 3-10 ms, 10-10 ms, 30-30 ms, 100-100 ms
Insulation method		Photocoupler insulation		
Internal current consumption		24 V DC, 40mA or less (all points ON)	24 V DC, 70mA or less (all points ON)	
Depth		Low-profile model	Standard model	
Weight		Approx. 220 g (not including terminal block)	Approx. 500 g (not including terminal block)	

Item		Specifications		
Model		**NP8SX-143**	**NP8X-155**	**NP8X-165**
No. of input points (Common configuration)		8 points (8 points/common 1 circuit)	32 points (16 points/common 2 circuit)	
Rated voltage		110 V DC	100/120 V AC	200/240 V AC
Max. allowed voltage		140 V DC or less	132 V AC	264 V AC
Input format		No Polarity	AC input	
Rated current		5 mA/point	10mA(at 100 V AC, 50Hz)	10mA(at 200 V AC, 50Hz)
Input impedance		20kΩ	10kΩ (50Hz),9kΩ (60Hz)	22kΩ (50Hz),18kΩ (60Hz)
Standard operation range	OFF to ON	80-140V	80 to 132 V	16 to 264 V
	ON to OFF	0-22V	0 to 35 V	0 to 70 V
Input delay time	OFF to ON ON to OFF	3 ±1.5 ms (hard filter time)	10 ms or less	
Insulation method		Photocoupler insulation		
Internal current consumption		24 V DC, 70mA or less (all points ON)	24 V DC, 50mA or less (all points ON)	
Depth		Low-profile model	Standard model	
Weight		Approx. 530 g (not including terminal block)	Approx. 550 g (not including terminal block)	

■Specifications

• Output specifications

Item		Specifications			
Model		**NP8Y-266**	**NP8Y-250**	**NP8Y-263**	**NP8SY-263**
No. of output points (Common configuration)		32 points (8 points/common 4 circuits)	16 points (8 points/common 2 circuits)	16 points (all points are independent)	
Output format		Relay output	Triac output	Relay output	
Rated voltage		240 V AC, 24 V DC	100 to 240 V AC	240 V AC, 24 V DC	
Voltage tolerance		264 V AC or less, 30 V DC or less	85 to 264 V AC	264 V AC or less, 30 V DC or less	
Max. load current		264 V AC: 1A/point, 5A/common 30 V DC: 1A/point, 5A/common	2A/point, 5A/common	264 V AC: 2A/point 30 V DC: 2A/point	
Output delay time	OFF to ON	10 ms or less (30 V DC)	1 ms or less	10 ms or less (30 V DC)	
	ON to OFF	10 ms or less (30 V DC)	10 ms or less	10 ms or less (30 V DC)	
Leakage current when OFF		0.1mA or less (at 200 V AC/60 Hz)	1mA or less (at 200 V AC/60 Hz)	0.1mA or less (at 200 V AC/60 Hz)	
Surge suppressor circuit		Varistor	CR absorber + varistor	Varistor	
Maximum opening/closing frequency		1800 times/hour		3600 times/hour	
Insulation method		Relay insulation, photocoupler insulation	Photocoupler insulation	Relay insulation, photocoupler insulation	
Internal current consumption		24 V DC, 120mA or less (all points ON)		24 V DC, 50mA or less (all points ON)	
No. of occupied words		SX bus direct connection: 2 words Remote I/O link: 2 words	SX bus direct connection: 2 words Remote I/O link: 1 word	SX bus direct connection: 2 words Remote I/O link: 2 words	
Depth		Standard model			Low-profile model
Weight		Approx. 630 g (not including terminal block)	Approx. 620 g (not including terminal block)	Approx. 500 g (not including terminal block)	Approx. 340 g (not including terminal block)

Item		Specifications				
Model		**NP8Y-221**	**NP8Y-223**	**NP8Y-226**	**NP8Y-257**	**NP8SY-260**
No. of output points (Common configuration)		32 points (16 points/common 2 circuits)			32 points (8 points/common 4 circuits)	16 points (8 points/common 2 circuits)
Output format		Transistor output sink type			Triac output	Relay output
Rated voltage		5-12-24 V DC	(12) 24-48 V DC	(12) 24-60 V DC	100 to 240 V AC	240 V AC, 24 V DC
Voltage tolerance		4.75 to 26.4 V DC	19 to 60 V DC	19 to 66 V DC	85 to 264 V AC	264 V AC or less, 30 V DC or less
Max. load current		5 V DC: 0.03A/point, 0.48A/common 12 to 24 V DC: 0.1A//point, 1.6A/common	12 V DC: 0.15A/point, 2.4A/common 24 to 48 V DC: 0.2A//point, 3.2A/common	12 V DC: 0.15A/point, 2.4A/common 24 to 60 V DC: 0.2A//point, 3.2A/common	0.6A/point, 2.4A/common	264 V AC: 2A/point, 8A/common 30 V DC: 2A/point, 8A/common
Output delay time	OFF to ON	1 ms or less (30 V DC)			1 ms or less	10 ms or less (30 V DC)
	ON to OFF	1 ms or less (30 V DC)			10 ms or less	10 ms or less (30 V DC)
Leakage current when OFF		0.1mA or less			1mA or less (at 200 V AC/60 Hz)	0.1mA or less (at 200 V AC/60 Hz)
Surge suppressor circuit		Diode			CR absorber and varistor	Varistor
Maximum opening/closing frequency					1800 times/hour	3600 times/hour
Insulation method		Photocoupler insulation				Relay insulation, photocoupler insulation
Internal current consumption		24 V DC, 70mA or less (all points ON)			24 V DC, 120mA or less (all points ON)	24 V DC, 50mA or less (all points ON)
No. of occupied words		SX bus direct connection: 2 words Remote I/O link: 2 words			SX bus direct connection: 2 words Remote I/O link: 2 words	SX bus direct connection: 2 words Remote I/O link: 1 words
Depth		Standard model				Low-profile model
Weight		Approx. 430g (not including terminal block)	Approx. 530 g (not including terminal block)	Approx. 320 g (not including terminal block)	Approx. 530 g (not including terminal block)	Approx. 370g (not including terminal block)

• Analog input specifications

Item	Specifications				
Model	**NP8AX-340MR**				**NP8AX-344**
Input channel	8 channels				
Analog input range	0 to 5 V	0 to 10 V	-5 V to +5 V	-10 V to +10 V	0 to 20mA
Digital output value	0 to 4000		-2000 to 2000		0 to 4000
Digital output model	BCD 4 digits with ± sign/BIN switching				
Resolution	12 bits				
No. of occupied words	8 words (input)				
Overall accuracy	±0.2% (0 to 55 °C)				±0.3% (0 to 55 °C)
Response time	1.2 ms or less/8 points + tact cycle (ms)				
Internal current consumption	24 V DC, 40mA				
External terminal	Detachable terminal block (M3.5, 20 poles)				
Depth	Standard model				
Weight	Approx. 500 g or less (not including terminal block)				

• Analog output specifications

Item	Specifications			
Model	**NP8AY-440MR**			
Output channel	8 channels			
Analog output range	0 to 5 V	0 to 10 V	-5 V to +5 V	-10 V to +10 V
Digital output value	0 to 4000		-2000 to 2000	
Digital output model	BCD 4 digits with ± sign/BIN switching			
Resolution	12 bits			
No. of occupied words	8 words (input)			
Overall accuracy	±0.2% (0 to 55 °C)			
Response time	1.2 ms or less/8 points + tact cycle (ms)			
Internal current consumption	DC24V 40mA			
External terminal	Detachable terminal block (M3.5, 20 poles)			
Depth	Standard model			
Weight	Approx. 500 g or less (not including terminal block)			

■Mounting dimensions of base board

Type	External dimension (W x H x D) [mm]	Weight [g]	Base board for SX	Fixing screw mounting space (W x H) [mm]
NP8B-13	508 x 260 x 36	1,500	13 slots	465 x 150 Same as FSB128/FSB110H
NP8B-11	438 x 260 x 36	1,300	11 slots	392 x 150 Same as FSB126/FSB088H
NP8B-08	336 x 260 x 36	1,000	8 slots	319 x 150 Same as FSB124/FSB086H
NP8B-06	263 x 260 x 36	800	6 slots	246 x 150 Same as FSB084

Note: The mounting base board is a unit used to fasten a MICREX-F sized I/O module to a MICREX-SX Series base board (NP1B□-□□).
When using a MICREX-F sized I/O module, please install a MICREX-SX Series base board in addition to the mounting base board.

Power Supply Unit for FLT-ASFKA

NP8S-LC□

■Outline

This unit serves to provide power for the conversion adapter (FLT-ASFKA), which is used to connect a PC loader through the T-link.
A board-mounting type (model: NP8S-LC1) and a tabletop-mounting type (model: NP8S-LC2) are available.

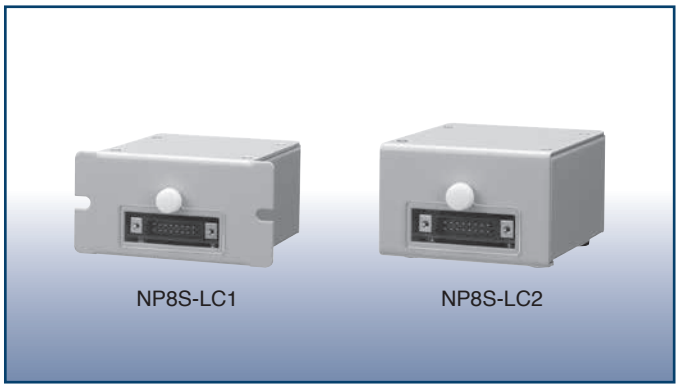

■Specifications

• General specifications

Item		Specifications	
Type		**NP8S-LC1**	**NP8S-LC2**
Physical environmental conditions	Operating ambient temperature	0 to +50°C	
	Storage temperature	-20 to 70°C	
	Relative humidity	30 to 90%RH (without condensation)	
	Contamination level	Contamination level 2	
	Corrosion resistance	No corrosive gas is present, no organic solvent adhesion	
	Operating altitude	Altitude of 2000 m or less, air pressure of 70 kPa or higher (equivalent to an altitude of 3000 m) during transportation	
Insulation method		Photocoupler, transformer	
Voltage resistance		2000 V AC, one minute (between the AC input section (batch) and the output connector (batch))	
Insulation resistance		500 V DC, 10 MΩ or more (Ordinary temperature, ordinary humidity)	
Installation conditions	Structure	Board-mounting, tabletop-mounting	
	Cooling method	Natural cooling	
Dimension		Board-mounting: 70 mm (W) x 44.4 mm (H) x 77 mm (D) Tabletop-mounting: 90 mm (W) x 46.6 mm (H) x 77 mm (D)	
Weight		Approx. 288 g	Approx. 280 g

• Power supply specifications

Item		Specifications
Power supply specifications	Rated input voltage	100 to 240V AC (Note)
	Allowable voltage range	85 to 264V AC
	Power consumption	At 100V AC: 0.11A, At 200V AC: 0.06A

Notes : The AC cable supplied with the product is for 100V AC. When using 200V AC power, separately prepare a cable for 200V AC.

■System configuration example

●T-link slave system

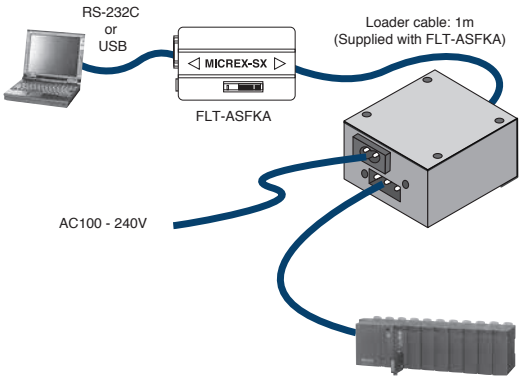

■Installation method

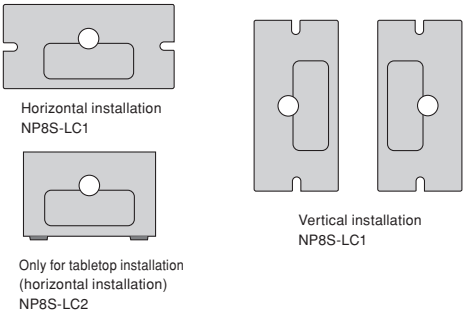

■Panel cut dimension (NP8S-LC1)

- For horizontal installation

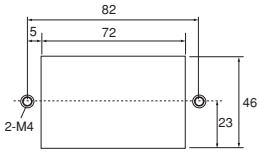

- For vertical installation

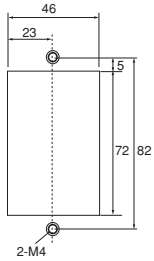

Dimensions

■Dimensions

(1) Power supply module

1) **NP1S-22, NP1S-42**

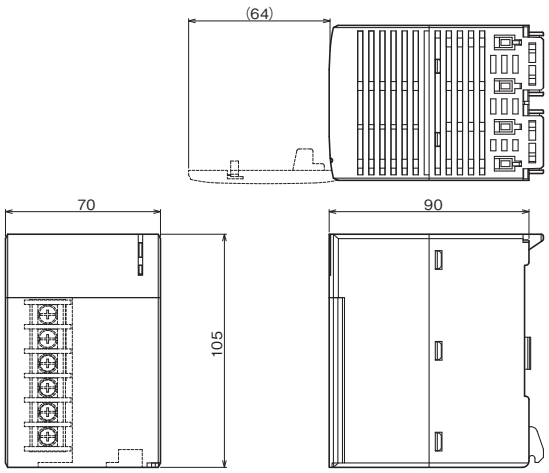

2) **NP1S-91, NP1S-81**

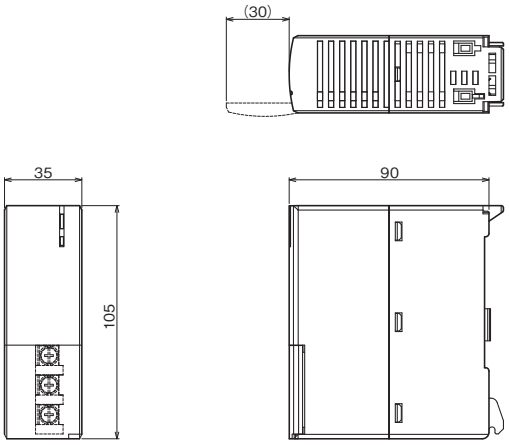

3) **NP1S-22S, NP1S-62S**

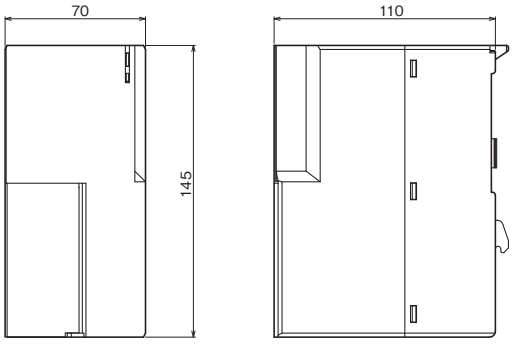

(2) CPU module

1) SPH5000M/SPH5000EC
NP1PA1-096E, NP1PA1-128E,
NP1PA1-256E, NP1PA1-512E,
NP1PA1C-096E, NP1PA1C-128E,
NP1PA1C-256E, NP1PA1C-512E

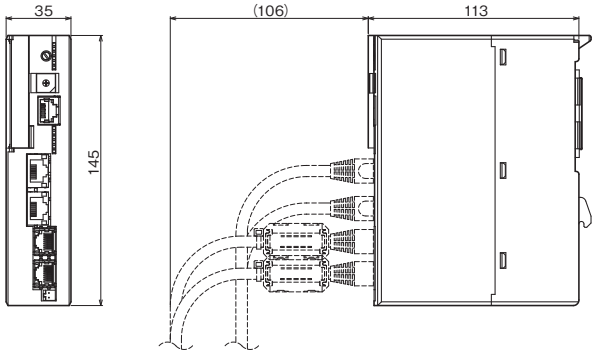

2) SPH5000H **NP1PU1-512H**

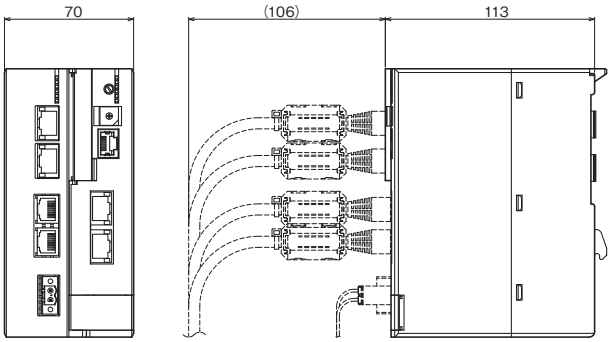

3) SPH3000MM
NP1PU2-048E, NP1PU2-256E

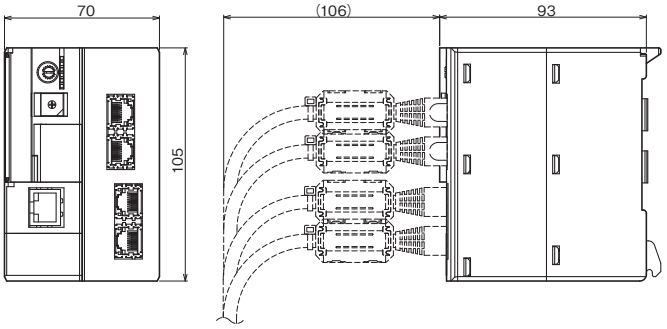

4) SPH3000MG
NP1PU1-256NE

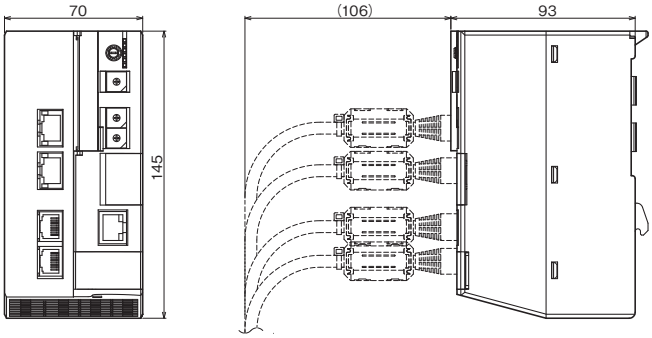

5) SPH300/SPH2000/SPH3000/SPH3000D
NP1PU-048EZM, NP1PU-096EZM, NP1PU-128EZM, NP1PU-256EZM, NP1PU-048E, NP1PU-128E, NP1PU-256E, NP1PM-48R, NP1PM-48E, NP1PM-256E, NP1PM-256H, NP1PS-32, NP1PS-32R, NP1PS-74R, NP1PS-117R, NP1PS-245R

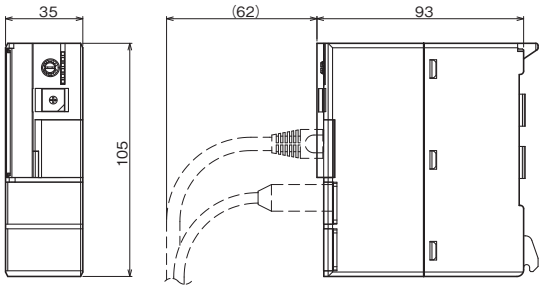

6) SPH300EX **NP1PS-74D**

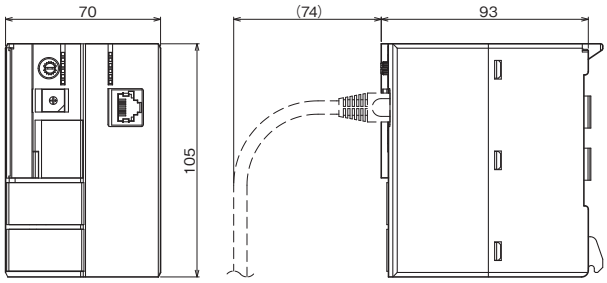

7) SPH200 **NP1PH-08, NP1PH-16**

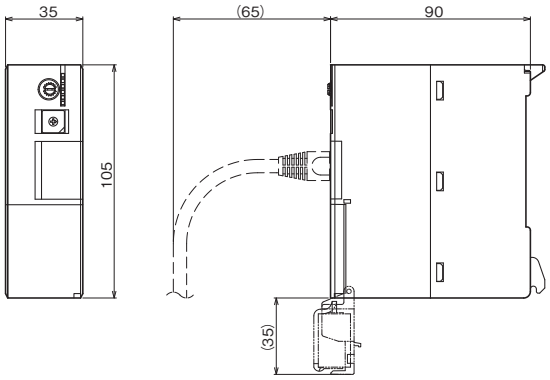

(3) Base board

1) EP-bus-based board 13 slots
NP1BE-13, NP1BX-13

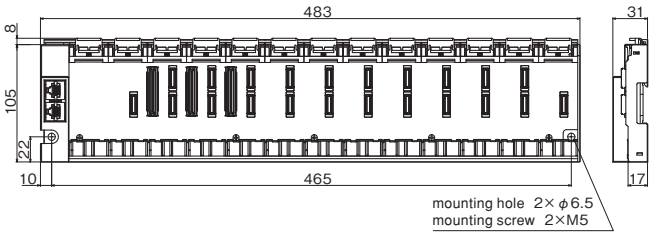

2) EP-bus-based board 11 slots **NP1BE-11**

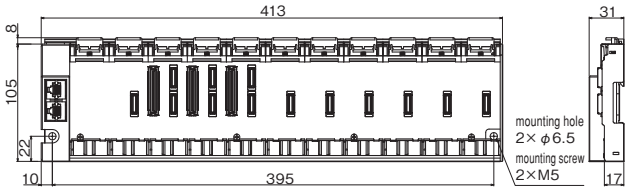

3) EP-bus-based board 8 slots **NP1BE-08**

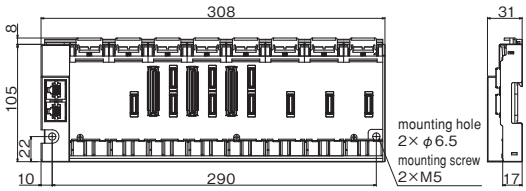

4) EP-bus-based board 6 slots **NP1BE-06**

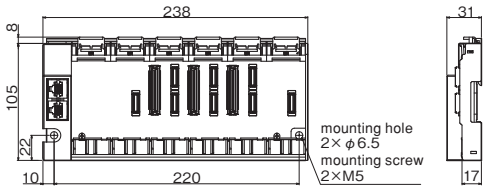

5) Base board 13 slots
NP1BP-13, NP1BS-13, NP1BP-13S, NP1BS-13S, NP1BP-13D, NP1BS-13D

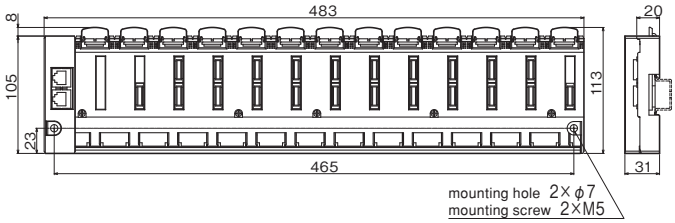

6) Base board 11 slots
NP1BS-11, NP1BS-11S, NP1BS-11D

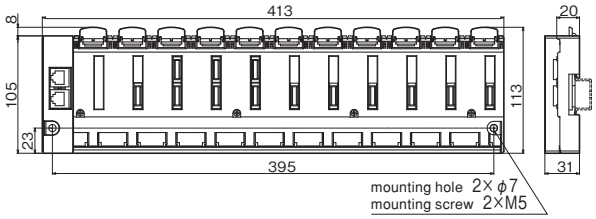

7) Base board 8 slots
NP1BS-08, NP1BS-08D, NP1BS-08S

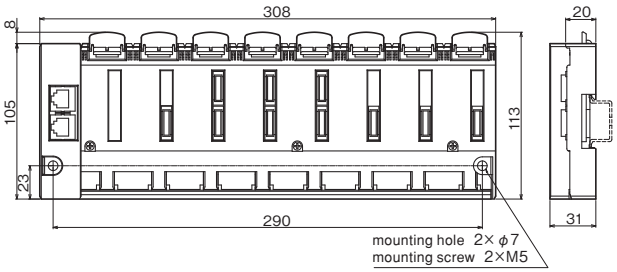

8) Base board 6 slots **NP1BS-06**

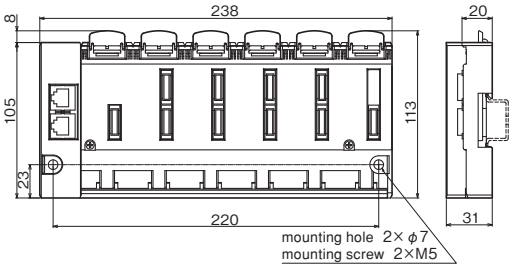

9) Base board 3 slots **NP1BS-03**

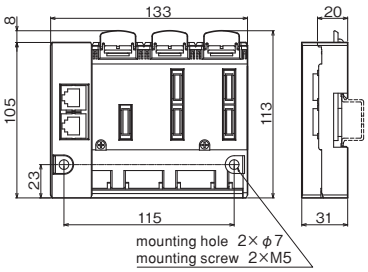

(4) Base board mounting bracket (accessories for base board)

Type	L (mm)
For NP1BE-13, NP1BX-13 / NP1BP-13 / NP1BS-13 / NP1BP-13S / NP1BS-13S / NP1BS-13D / NP1BP-13D	476.5
For NP1BE-11 / NP1BS-11 / NP1BS-11S / NP1BS-11D	406.5
For NP1BE-08 / NP1BS-08 / NP1BS-08S / NP1BS-08D	301.5
For NP1BE-06 / NP1BS-06	231.5
For NP1BS-03	126.5

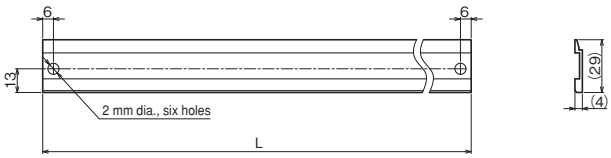

(5) Base board mounting stud **NP8B-ST**

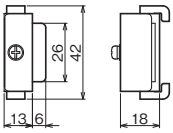

(6) I/O module
1) Digital I/O module **NP1X0805**

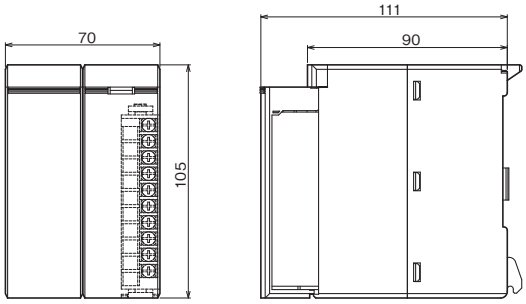

2) 16-point module
Digital I/O module
NP1X1606-W, NP1X1607-W, NP1X1610, NP1X1610-RI, NP1X1611-RI
Digital output module
NP1Y08T0902, NP1Y16T09P6, NP1Y16T10P2, NP1Y08U0902, NP1Y16U09P6, NP1Y08S, NP1Y16S-08 NP1Y16R-08, NP1Y08R-00
Digital I/O module
NP1W1606T, NP1W1606U
Analog input module
NP1AX04-MR, NP1AXH4-MR, NP1AX08V-MR, NP1AX08I-MR
Analog output module **NP1AY02-MR, NP1AYH2-MR**

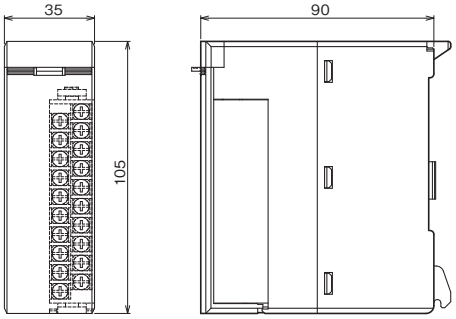

3) 32-point module
Digital input module **NP1X3206-W, NP1X3202-W**
Digital output module **NP1Y32T09P1, NP1Y32U09P1**
Digital I/O module **NP1W3206T, NP1W3206U**
High-speed digital input module **NP1X3206-A**
Pulse train output built-in digital output module
NP1Y32T09P1-A

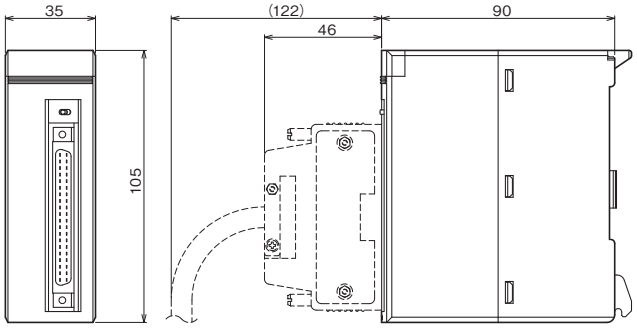

4) 64-point module
Digital input module **NP1X6406-W**
Digital output module **NP1Y64T09P1, NP1Y64U09P1**
Digital I/O module **NP1W6406T, NP1W6406U**

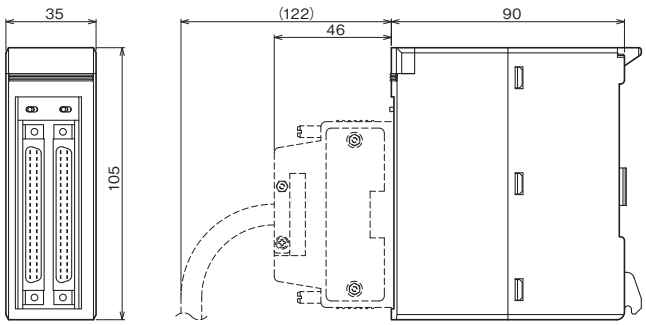

5) 8-point module
Digital input module **NP1X0810, NP1X0811**
Digital output module **NP1Y08R-04**

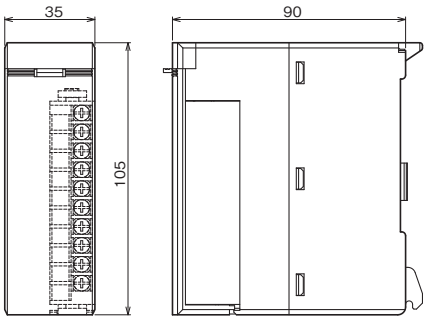

6) Terminal block protrusion module
Analog input module
NP1AXH8V-MR, NP1AXH8I-MR, NP1AXH8VG-MR, NP1AXH8IG-MR
Analog output module
NP1AYH4V-MR, NP1AYH4I-MR, NP1AYH4VG-MR, NP1AYH4IG-MR, NP1AYH8V-MR, NP1AYH8I-MR
Analog input/output module **NP1AWH6-MR**
Resistance thermometer element input module **NP1AXH4-PT**
Resistance thermometer element input module **NP1AXH6G-PT**
Thermo-couple input module **NP1AXH4-TC**
Thermo-couple input module **NP1AXH8G-TC**
Distributor module **NP1AXH4DG-MR**
Flow meter F/AD conversion module **NP1F-PI4**

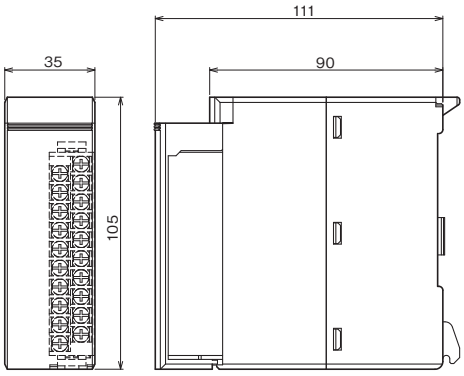

7) Duplex analog output module **NP1AYH8VHR-MR**

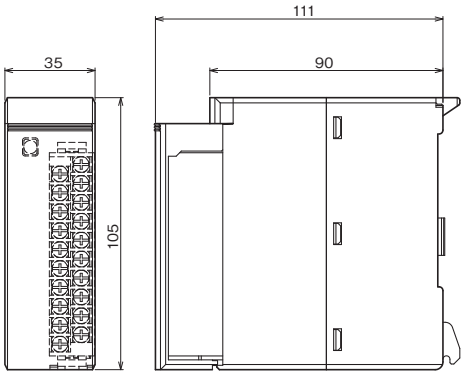

(7) Communication module
1) Web module **NP1L-WE1**
Ethernet module **NP1L-ET1**

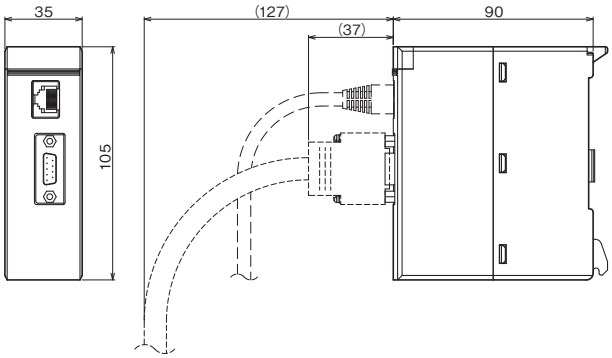

2) Web memory module **NP1L-WS1**

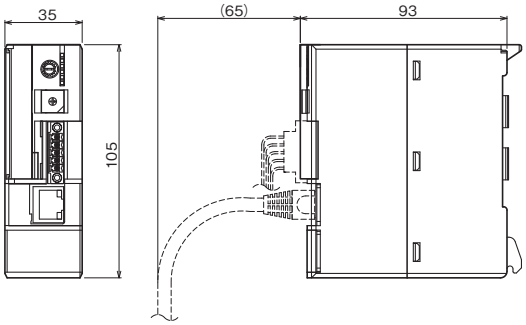

3) FL-net (OPCN-2) module **NP1L-FL3**

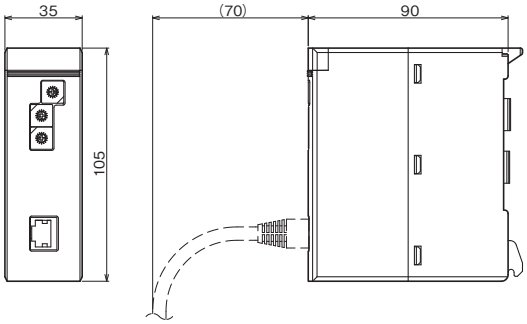

Dimensions

4) LonWorks interface module **NP1L-LW1**

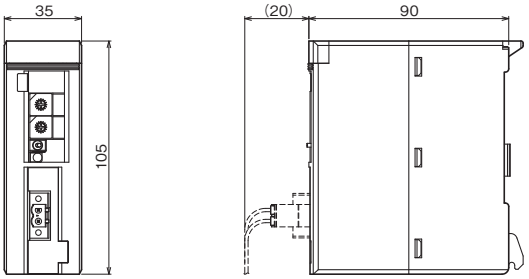

5) P-link module **NP1L-PL1**
PE-link module **NP1L-PE1**
OPCN-1 master module **NP1L-JP1**
OPCN-1 slave module **NP1L-JS1**
OPCN-1 interface module **NP1L-RJ1**
T-link master module **NP1L-TL1**
T-link slave module **NP1L-TS1**
T-link interface module **NP1L-RT1**

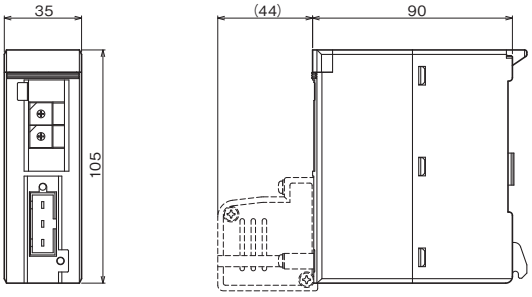

6) LE-net module **NP1L-LE1**

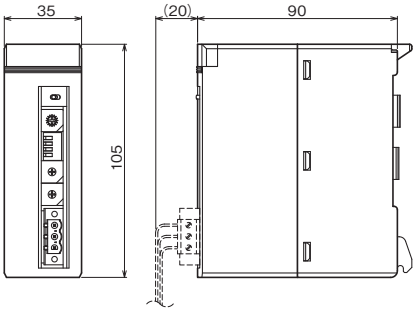

7) LE-net loop 2 module **NP1L-LL2**

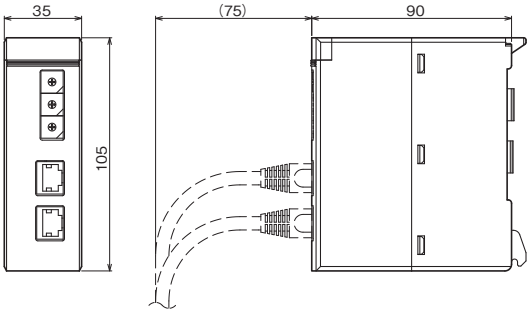

8) General purpose communication module **NP1L-RS1/2/3/4**
PROFIBUS-DP master module **NP1L-PD2,**
PROFIBUS-DP slave module **NP1L-PS1**
PROFIBUS-DP interface module **NP1L-RP1**

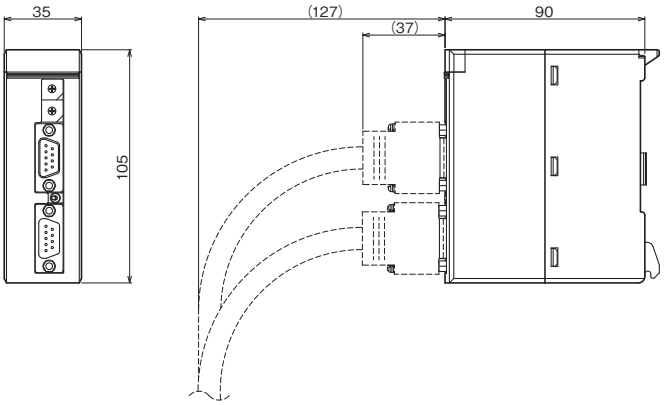

9) General purpose communication module **NP1L-RS5**

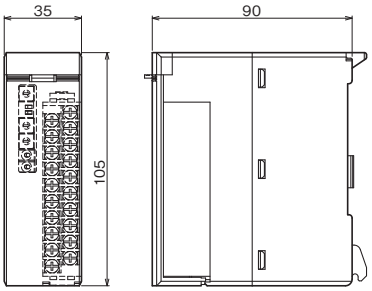

10) DeviceNet master module **NP1L-DN1**
DeviceNet slave module **NP1L-DS1**
DeviceNet interface module **NP1L-RD1**

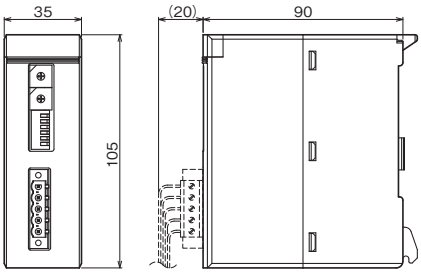

11) Multi-use communication module **NP1F-MU1**
M-NET communication module **NP1L-MN1**

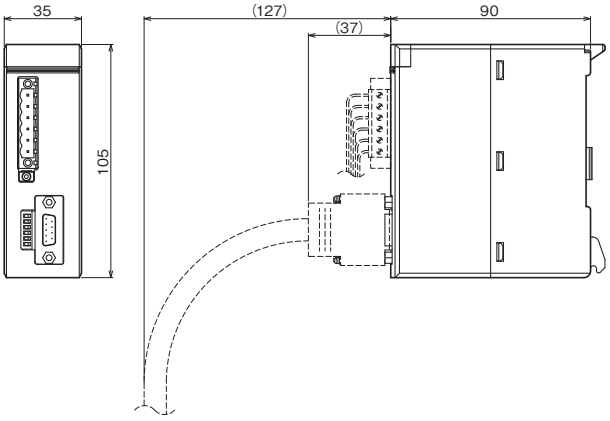

12) NR1□Series

NR1JX-1606DT, NR1JY-08R07DT, NR1JY-16T05DT, NR1JW-16T65DT, NR1SX-1606DT, NR1SY-08R07DT, NR1SY-16T05DT, NR1SW-16T65DT, NR1TX-1606DT, NR1TY-08R07DT, NR1TY-16T05DT, NR1TW-16T65DT, NR1LX-1606DT, NR1LY-08R07DT, NR1LW-11R80DT, NR1SF-HP4DT

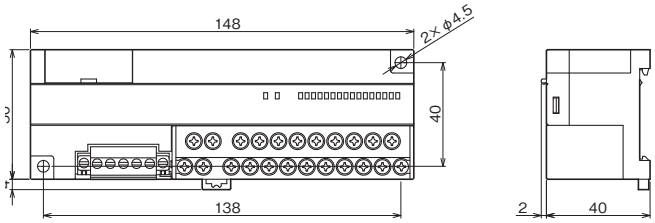

13) Remote terminal master/slave module **NP1L-RM1**

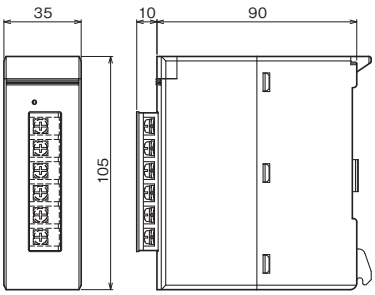

14) USB communication module **NP1L-UC1**

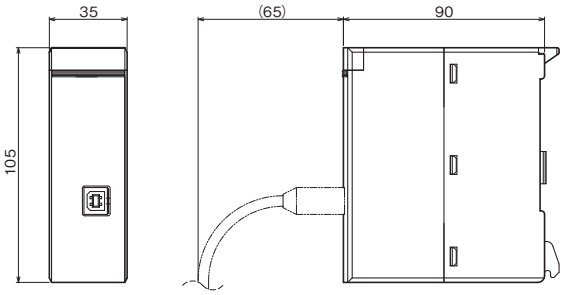

15) SX bus optical link module **NP1L-OL1**

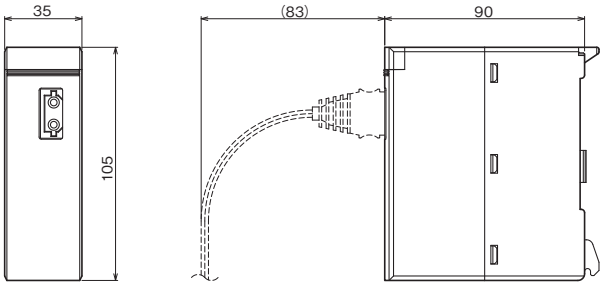

NP1L-OL3

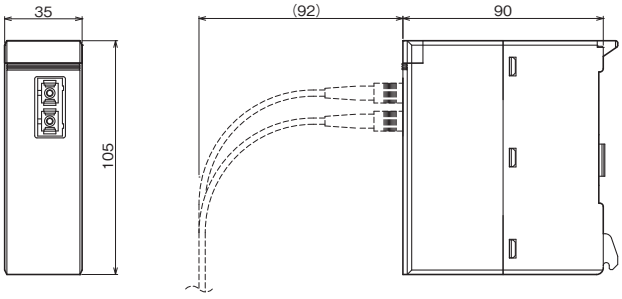

16) SX bus optical link converter **NP2L-OE1**

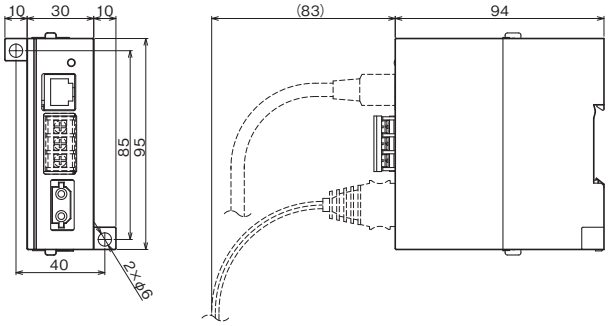

17) SX bus electric repeater **NP2L-RP1**

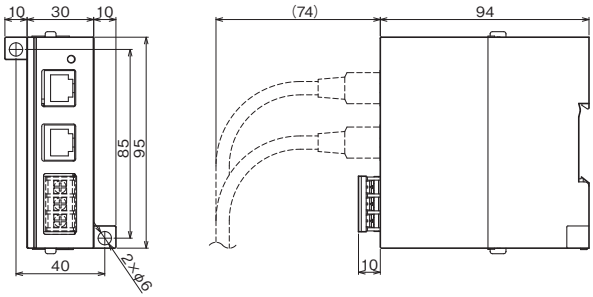

18) SX bus duplication unit **NP2L-BH1**

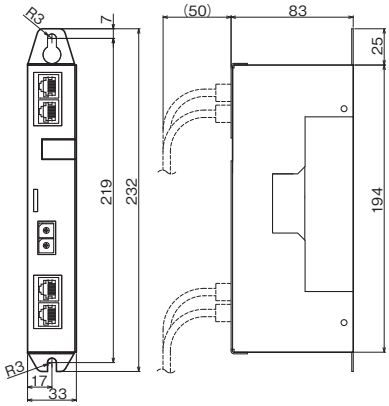

19) T-link optical converter **FNC160A-C20**
P/PE-link optical converter **FNC360A-C20**

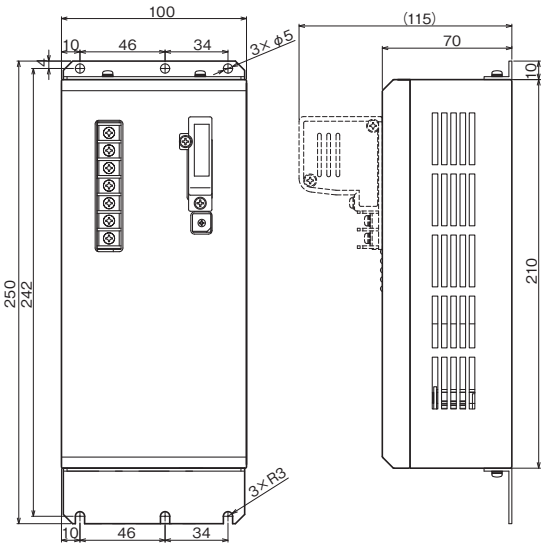

(8) Function module/unit
1) Dummy module **NP1F-DMY**

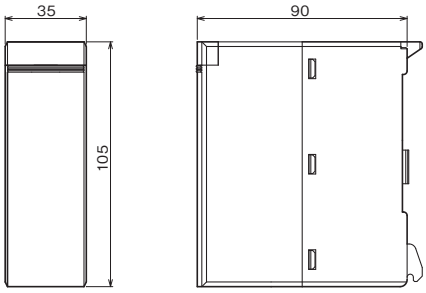

2) Multi-use communication module **NP1F-MU1**
M-NET communication module **NP1L-MN1**

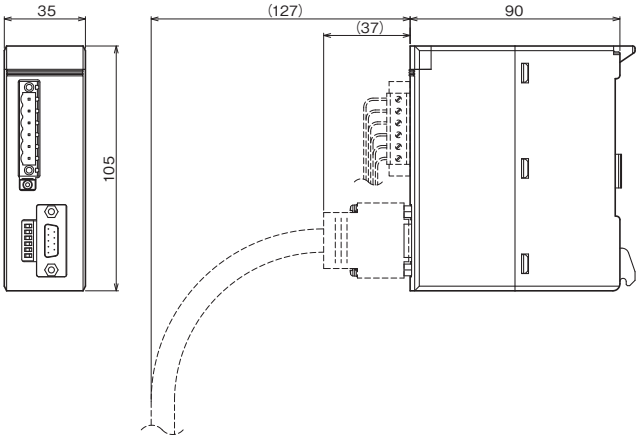

(9) Positioning control module/unit
1) High-speed counter module
NP1F-HC2, NP1F-HC2MR, NP1F-HC2MR1
Multi-channel high-speed counter module **NP1F-HC8**

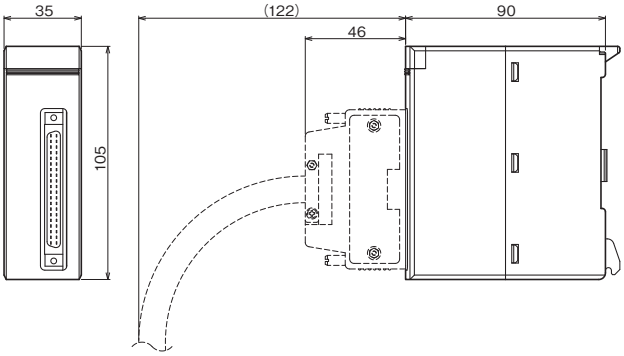

2) Positioning control module
NP1F-MA2, NP1F-MP2, NP1F-HP2
NP1F-HD2A, NP1F-HD4

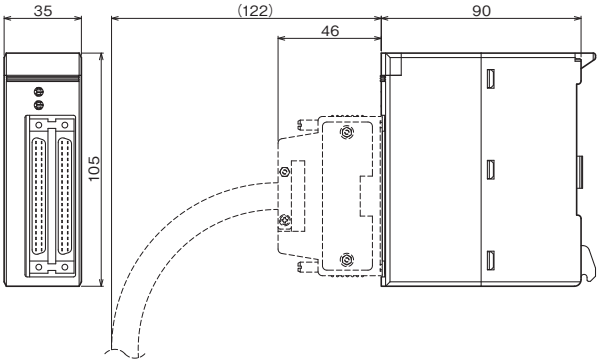

3) SX bus T-branch unit **NP8B-TB**

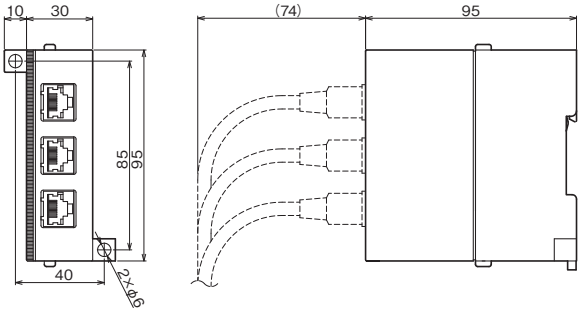

(10) Option

1) Battery box **NP8P-BTS**

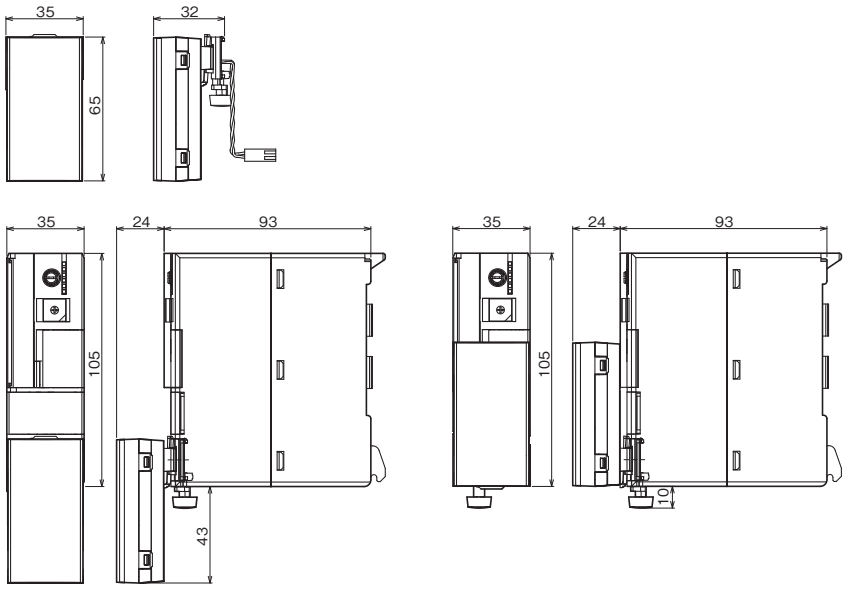

(11) PCI-bus-based board

1) LE-net loop 2 board **NP3L-LL2PCS**
FL-net (OPCN-2 board) **NP3L-FL3PCS**

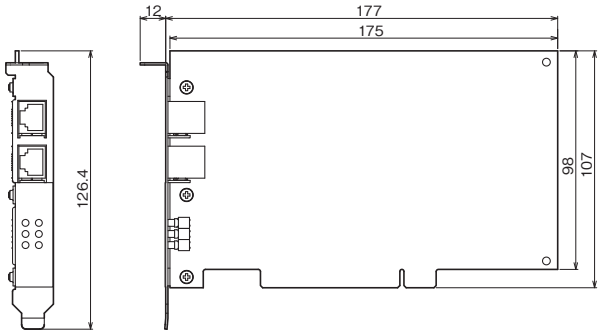

(12) E-SX bus based

1) Analog input/output unit **NU2AXH2-MR, NU2AYH2V-MR**

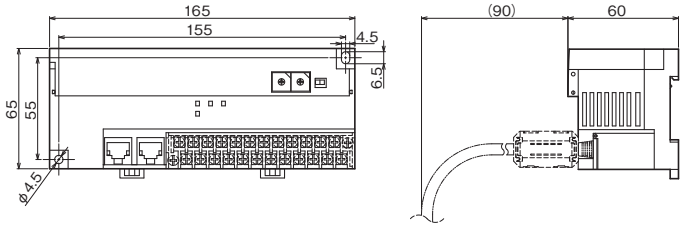

2) Digital I/O unit **NU2X3206-W, NU2Y32T09P6**

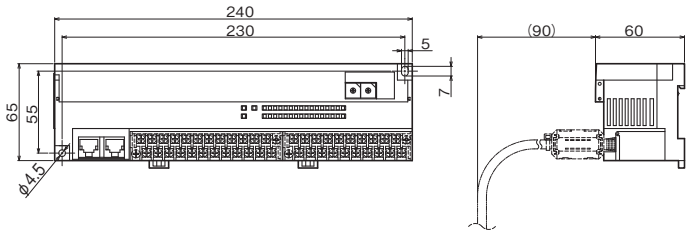

3) Auxiliary power supply unit **NU2V-PA1**

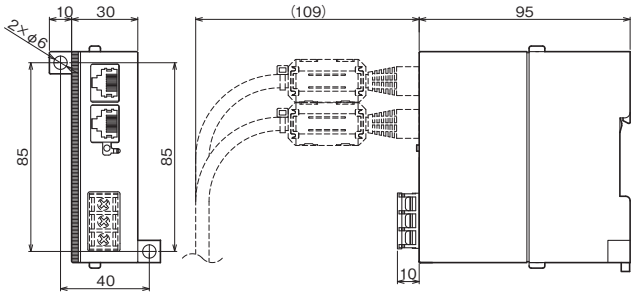

Dimensions

4) Integrated type interface module **NP1L-RU1, NP1L-RU1H**

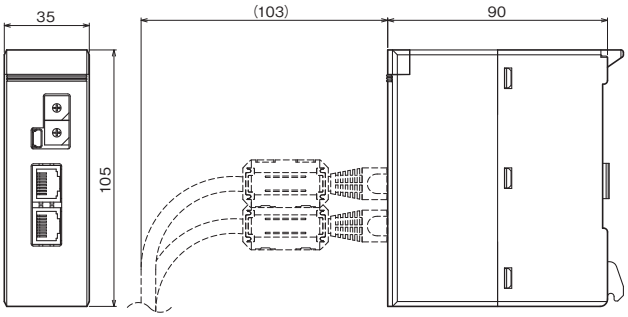

MICREX-F Size I/O Module mounting base board
NP8B-06, NP8B-08, NP8B-11, NP8B-13

Type	L1 (mm)	L2 (mm)
NP8B-13	463	508
NP8B-11	392	438
NP8B-08	319	336
NP8B-06	246	263

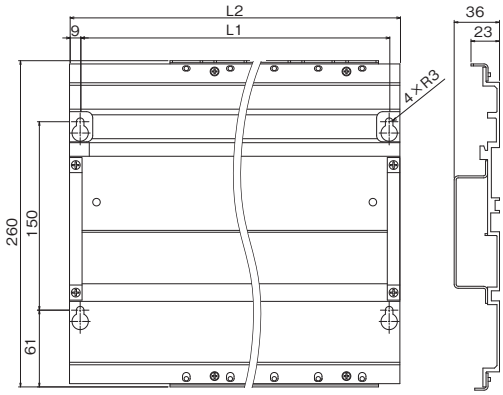

(13) F size I/O module
NP8X-120ZC, NP8X-123ZC, NP8X-155ZC, NP8X-165ZC, NP8Y-221ZC, NP8Y-223ZC, NP8Y-226ZC, NP8Y-250ZC, NP8Y-257ZC, NP8Y-263ZC, NP8Y-266ZC
NP8AX-340MR, NP8AX-344, NP8AY-440MR

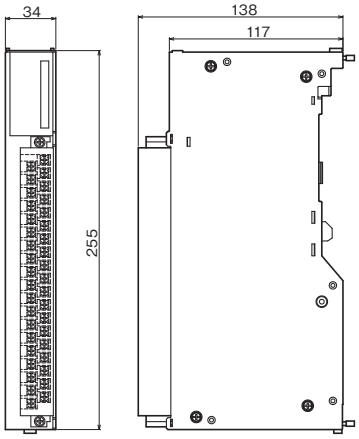

NP8SX-113ZC, NP8SX-143ZC, NP8SY-260ZC, NP8SY-263ZC

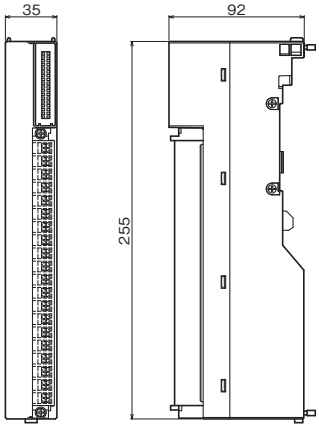

Type/Ordering codes

- SPH5000M/SPH5000H/SPH3000MG/SPH3000MM E-SX bus product

Product name		Model	Specifications and names				Ordering code	Standards CE *2	UL cUL	LR *3	NK
CPU module	SPH5000H	**NP1PU1-512H**	SPH5000H Program memory capacity 512 k step User ROM/USB/Ethernet		Accessories: Instruction Manual Data backup battery SX bus terminating plug ×2 Screwdriver (CPU No., CPU mode setting) Connector dust caps ×7 FL-net address sticker	Basic instruction processing speed 6 ns or higher per instruction Applied instruction processing speed 5 ns or higher per instruction	NP1PU1-512H	○			
	SPH3000MG	**NP1PU1-256NE**	Program memory capacity 256K steps User ROM/USB/Ethernet/SX-Net adapted, Max. No. of I/O Points: 73728		Accessories: Data backup battery (Built-in) SX bus terminating plug ×2 Screwdriver (for the CPU setting)	Basic instruction Processing speed 6 ns –	NP1PU1-256NE	○	○		
	SPH3000MM	**NP1PU2-048E**	Program memory capacity 48K steps x 2 User ROM/USB/Ethernet adapted, Max. No. of I/O Points: 139264			Basic instruction Processing speed 9 ns –	NP1PU2-048E	○	○*7		
		NP1PU2-256E	Program memory capacity 256K steps x 2 User ROM/USB/Ethernet adapted, Max. No. of I/O Points: 139264				NP1PU2-256E	○	○*7		
	SPH5000M	**NP1PA1-096E**	Program memory capacity 96K steps	User ROM/USB/ Ethernet Max. No. of I/O Points: 73,728 E-SX bus port ×1 RS-422 port for maintenance ×1	Accessories: Instruction Manual SX bus terminating plug ×2 Screwdriver (CPU No., CPU mode setting) Battery holder	Basic instruction Processing speed 4 ns –	NP1PA1-096E	○	○		
		NP1PA1-128E	Program memory capacity 128K steps				NP1PA1-128E	○	○		
		NP1PA1-256E	Program memory capacity 256K steps				NP1PA1-256E	○	○		
		NP1PA1-512E	Program memory capacity 512K steps				NP1PA1-512E	○	○		
E-SX bus extension cable *1		**NU1C-P3**	300 mm cable				NU1C-P3	-			
		NU1C-P6	600 mm cable				NU1C-P6	-			
		NU1C-P8	800 mm cable				NU1C-P8	-			
		NU1C-02	2,000 mm cable				NU1C-02	-			
		NU1C-05	5,000 mm cable				NU1C-05	-			
		NU1C-10	10,000 mm cable				NU1C-10	-			
		NU1C-15	15,000 mm cable				NU1C-15	-			
		NU1C-25	25,000 mm cable				NU1C-25	-			
		NU1C-50	50,000 mm cable				NU1C-50	-			
		NU1C-A0	100,000 mm cable				NU1C-A0	-			
Duplex E-SX bus integrated type interface module		**NP1L-RU1H**	E-SX bus duplex					○			
Communication module		**NP1L-RU1**	E-SX bus integrated type interface module				NP1L-RU1	○			
E-SX bus Separate placement unit		**NU2X3206-W**	24 V DC, 32 points, 7 mA, 0 to 100 ms variable			Screw terminal	NU2X3206-W	○	○		
		NU2Y32T09P6	Transistor sink , 12 to 24 V DC, 32 points, 0.6 A/point, 4 A/common			Screw terminal	NU2Y32T09P6	○	○		
		NU2AXH2-MR	High-speed multiple-range input 2 ch, resolution: 15 bits, 25 µs conversion period			Screw terminal	NU2AXH2-MR	○	○		
		NU2AYH2V-MR	High-speed multiple-range output 2 ch, resolution: 15 bits (voltage), 25 µs conversion period			Screw terminal	NU2AYH2V-MR	○	○		
		NU2F-HC2	High-speed counter unit, 4 Mbps (line driver), 1 Mbps (open collector 5 V/12 V/24 V DC)				NU2F-HC2	○	○		
		NU2V-PA1	Auxiliary power unit E-SX bus built-in 24 V DC power supply				NU2V-PA1	○	○		
ROM card		**NP8PSD-002**	User ROM card SD memory card for SPH3000/SPH3000 MM/SPH3000MG, Capacity 2 GB				NP8PSD-002	-	-	-	-

*1 Any length of cable is applicable. Contact our sales representatives for details.
*7 There is no cUL certification.

Ordering Information

- SPH product

Product name		Model	Specifications and names				Ordering code	Standards CE *2	UL cUL	LR *3	NK
CPU module	SPH200	**NP1PH-08**	Program memory capacity 8K steps Max. number of I/O points: 8192 points		Accessories: Memory backup battery (built-in) SX bus terminating plug 2 pieces Screwdriver (for the CPU setting)	Basic instruction Processing speed 70 ns –	NP1PH-08	○	○	○	○
		NP1PH-16	Program memory capacity 16K steps Max. number of I/O points: 8192 points				NP1PH-16	○	○	○	○
	SPH300	**NP1PS-32**	Program memory capacity 32K steps Max. number of I/O points: 8192 points			Basic instruction Processing speed 20 ns –	NP1PS-32	○	○	○	○
		NP1PS-32R	Program memory capacity 32K steps User ROM/USB adapted, Max. No. of I/O points: 8192 points				NP1PS-32R	○	○	○	○
		NP1PS-74R	Program memory capacity 74K steps User ROM/USB adapted, Max. No. of I/O points: 8192 points				NP1PS-74R	○	○	○	○
		NP1PS-117R	Program memory capacity 117K steps User ROM/USB adapted, Max. No. of I/O points: 8192 points				NP1PS-117R	○	○	○	○
		NP1PS-245R	Program memory capacity 245K steps User ROM/USB adapted, Max. No. of I/O points: 8192 points				NP1PS-245R	○	○	○	○
	SPH300EX	**NP1PS-74D**	Program memory capacity 74K steps x 2 User ROM/USB adapted, Max. No. of I/O points: 8192 points x 2				NP1PS-74D	○	○		
	SPH2000	**NP1PM-48R**	Program memory capacity 48K steps User ROM/USB adapted, Max. No. of I/O points: 8192 points			Basic instruction Processing speed 30 ns –	NP1PM-48R	○	○	○	○
		NP1PM-48E	Program memory capacity 48K steps User ROM/USB/Ethernet adapted, Max. No. of I/O Points: 8192				NP1PM-48E	○	○	○	○
		NP1PM-256E	Program memory capacity 256K steps User ROM/USB/Ethernet adapted, Max. No. of I/O Points: 8192				NP1PM-256E	○	○	○	○
		NP1PM-256H	Program memory capacity 256K steps, redundancy function supported User ROM/USB adapted, Max. No. of I/O points: 8192 points				NP1PM-256H	○	○	○	○
	SPH3000	**NP1PU-048E**	Program memory capacity 48K steps User ROM/USB/Ethernet adapted, Max. No. of I/O Points: 8192			Basic instruction Processing speed 9 ns –	NP1PU-048E	○	○		
		NP1PU-128E	Program memory capacity 128K steps User ROM/USB/Ethernet adapted, Max. No. of I/O Points: 8192				NP1PU-128E	○	○		
		NP1PU-256E	Program memory capacity 256K steps User ROM/USB/Ethernet adapted, Max. No. of I/O Points: 8192				NP1PU-256E	○	○		
	BACnet MS/TP* CPU	**NP1PUBM-048C**	Program memory capacity 48K steps, BACnet protocol ・Compliant with ANSI/ASHRAE Standard 135-2012 ・Operates as MS/TP master ・Device profiles support B-ASC functions			Basic instruction Processing speed 9 ns –	NP1PUBM-048C	○	○		
	SPH3000D	**NP1PU-048EZM**	Program memory capacity 48K steps User ROM/USB/Ethernet adapted, Max. No. of I/O points: 8,192			Basic instruction Processing speed 9 ns –	NP1PU-048EZM	○	○		
		NP1PU-096EZM	Program memory capacity 96K steps User ROM/USB/Ethernet adapted, Max. No. of I/O points: 8,192				NP1PU-096EZM	○	○		
		NP1PU-128EZM	Program memory capacity 128K steps User ROM/USB/Ethernet adapted, Max. No. of I/O points: 8,192				NP1PU-128EZM	○	○		
		NP1PU-256EZM	Program memory capacity 256K steps User ROM/USB/Ethernet adapted, Max. No. of I/O points: 8,192				NP1PU-256EZM	○	○		
	SPH3000EC	**NP1PA1C-096E**	Program memory capacity 96K steps	User ROM/USB/Ethernet (1000BASE-T) compatible Max. number of I/O points 73,728 EtherCAT port 1 -system	Accessories: Instruction manual, SX bus terminating plug (2x), driver (for CPU No. settings), battery holder	Basic instruction Processing speed 4 ns –	NP1PA1C-096E	○			
		NP1PA1C-128E	Program memory capacity 128K steps				NP1PA1C-128E	○			
		NP1PA1C-256E	Program memory capacity 256K steps				NP1PA1C-256E	○			
		NP1PA1C-512E	Program memory capacity 512K steps				NP1PA1C-512E	○			
Power supply module		**NP1S-22**	Input: 100 to 120 V/ 200 to 240 V AC Output: 35 W Accessories: ALM contact connector, line voltage switching short bar				NP1S-22	○	○*4	○	○
		NP1S-91	Input: 100 to 120 V AC Output: 15 W (1 slot)				NP1S-91	○	○*5		
		NP1S-81	Input: 200 to 240 V AC Output: 15 W (1 slot)				NP1S-81	○	○*6		
		NP1S-42	Input: 24 V DC Output: 15 Accessories: ALM contact connector				NP1S-42	○	○*7	○	○
Large capacity power supply module		**NP1S-22S**	Input: 100 to 200 V AC, Output: 70 W			Accessories: ALM contact connector	NP1S-22S	○	○		
		NP1S-62S	Input: 110 V DC, Output: 70 W				NP1S-62S	○	○		
Base board		**NP1BS-03**	For 3 slots Processor buses 2 slots			Accessories: Base board Mounting bracket	NP1BS-03	○	○	○	○
		NP1BS-06	For 6 slots Processor buses 4 slots				NP1BS-06	○	○	○	○
		NP1BS-08	For 8 slots Processor buses 3 slots				NP1BS-08	○	○	○	○
		NP1BS-11	For 11 slots Processor buses 3 slots				NP1BS-11	○	○	○	○
		NP1BS-13	For 13 slots Processor buses 3 slots				NP1BS-13	○	○	○	○
		NP1BP-13	For 13 slots Processor buses 10 slots				NP1BP-13	○	○	○	○
		NP1BS-08S	Base board with station number setting switch, for 8 slots processor buses 3 slots				NP1BS-08S	○	○		
		NP1BS-11S	Base board with station number setting switch, for 11 slots processor buses 3 slots				NP1BS-11S	○	○		
		NP1BS-13S	Base board with station number setting switch, for 13 slots processor buses 3 slots				NP1BS-13S	○	○		
		NP1BP-13S	Base board with station number setting switch, for 13 slots processor buses 10 slots				NP1BP-13S	○	○		
		NP1BS-08D	Hot plug base board with station number setting switch, for 8 slots processor buses 3 slots				NP1BS-08D	○	○	○	○
		NP1BS-11D	High-performance hot plug base board with station number setting switch, for 11 slots processor buses 3 slots				NP1BS-11D	○	○	○	○
		NP1BS-13D	Hot plug base board with station number setting switch, for 13 slots processor buses 3 slots				NP1BS-13D	○	○	○	○
		NP1BP-13D	High-performance hot plug base board with station number setting switch, for 13 slots processor buses 10 slots				NP1BP-13D	○	○	○	○

○	Applicable	-	Not applicable

*Only for Japan's doemestic market
*1 Any length of cable is applicable. Contact our sales representatives for details.
*2 The compliance with the CE marking is confirmed for a single unit in the SX series. Be sure to check the compliance with the standard of the final product in which the SX series is built.
*3 To prevent the vibration, the module must be fixed for each of the base boards.
*4 The model NP1S-22 B is UL-certified.
*5 The model NP1S-91 A is UL-Recognition-certified (cUL certification is not obtained).
*6 The model NP1S-81 A is UL-Recognition-certified (cUL certification is not obtained).
*7 There is no cUL certification.

Product name	Model	Specifications and names			Ordering code	Standards CE *2	UL cUL	LR *3	NK
EP-bus-based board	**NP1BE-06**	6 slots	Processor buses 3 slots SPH5000M/EC support 3 slots	Accessories: Base board, Mounting bracket	NP1BE-06	○	○		
	NP1BE-08	8 slots			NP1BE-08	○	○		
	NP1BE-11	11 slots			NP1BE-11	○	○		
	NP1BE-13	13 slots			NP1BE-13	○	○		
	NP1BX-13	13 slots	Processor buses 10 slots SPH5000M/EC support 3 slots		NP1BX-13	○	○		
SX bus extension cable *1	**NP1C-P3**	300 mm cable			NP1C-P3	-	○	○	○
	NP1C-P6	600 mm cable			NP1C-P6	-	○	○	○
	NP1C-P8	800 mm cable			NP1C-P8	-	○	○	○
	NP1C-02	2,000 mm cable			NP1C-02	-	○	○	○
	NP1C-05	5,000 mm cable			NP1C-05	-	○	○	○
	NP1C-10	10,000 mm cable			NP1C-10	-	○	○	○
	NP1C-15	15,000 mm cable			NP1C-15	-			
	NP1C-25	25,000 mm cable			NP1C-25	-	○	○	○
SX bus T-branch unit	**NP8B-TB**	SX bus T-branch connecting unit, Accessories: SX bus terminating plug 1 piece			NP8B-TB	○	○	○	○
Digital input module *8	**NP1X1606-W**	24 V DC, 16 points, 7 mA, 1 to 100 ms variable		Screw terminal	NP1X1606-W	○	○	○	○
	NP1X3206-W	24 V DC, 32 points, 4 mA, 1 to 100 ms variable, optional connector		Connector	NP1X3206-W	○	○	○	○
	NP1X3202-W	5/12 V DC, 32 points, 3/9 mA, 1 to 100 ms variable, optional connector		Connector	NP1X3202-W	○	○	○	○
	NP1X3206-A	24 V DC, 32 points, 4 mA, 0.1 to 100 ms variable, pulse catch 20 kHz, optional connector		Connector	NP1X3206-A	○	○		
	NP1X6406-W	24 V DC, 64 points, 4 mA, 1 to 100 ms variable, optional connector		Connector	NP1X6406-W	○	○	○	○
	NP1X1607-W	48 V DC, 16 points, 5 mA, 1 to 100 ms variable		Screw terminal	NP1X1607-W	○	○		
	NP1X0805	110 V DC, 8 points, 5 mA, 1 to 100 ms variable		Screw terminal	NP1X0805				
	NP1X0810	100 to 120 V AC, 8 points, 10 mA, 10 ms		Screw terminal	NP1X0810	○	○	○	○
	NP1X1610	100 to 120 V AC, 16 points, 10 mA, 10 ms		Screw terminal	NP1X1610	○	○	○	○
	NP1X0811	200 to 240 V AC, 8 points, 10 mA, 10 ms		Screw terminal	NP1X0811	○	○	○	○
	NP1X1610-RI	100 to 120 V AC, 16 points, 7 mA, 10 ms		Screw terminal	NP1X1610-RI	○	○		
	NP1X1611-RI	200 to 240 V AC, 16 points, 7 mA, 10 ms		Screw terminal	NP1X1611-RI	○	○		
Digital output module *8	**NP1Y08T0902**	Transistor sink , 12 to 24 V DC, 8 points, 2.4 A/point, 8 A/common		Screw terminal	NP1Y08T0902	○	○	○	○
	NP1Y16T09P6	Transistor sink , 12 to 24 V DC, 16 points, 0.6 A/point, 4 A/common		Screw terminal	NP1Y16T09P6	○	○	○	○
	NP1Y32T09P1-A	Transistor sink , 24 V DC, 32 points, 0.12 A/point, 3.2 A/common Pulse train output 20 kHz x 4 ch (Built-in), optional connector		Connector	NP1Y32T09P1-A	○	○		
	NP1Y32T09P1	Transistor sink , 12 to 24V DC, 32 points, 0.12 A/point, 3.2 A/common, optional connector		Connector	NP1Y32T09P1	○	○	○	○
	NP1Y64T09P1	Transistor sink , 12 to 24V DC, 64 points, 0.12 A/point, 3.2 A/common, optional connector		Connector	NP1Y64T09P1	○	○	○	○
	NP1Y16T10P2	Transistor sink , 48 V DC, 16 points, 0.2 A/point, 1.6 A/common		Screw terminal	NP1Y16T10P2	○	○		
	NP1Y08U0902	Transistor source, 12 to 24 V DC, 8 points, 2.4 A/point, 8 A/common		Screw terminal	NP1Y08U0902	○	○	○	○
	NP1Y16U09P6	Transistor source, 12 to 24 V DC, 16 points, 0.6 A/point, 4 A/common		Screw terminal	NP1Y16U09P6	○	○	○	○
	NP1Y32U09P1	Transistor source, 12 to 24V DC, 32 points, 0.12 A/point, 3.2 A/common, optional connector		Connector	NP1Y32U09P1	○	○	○	○
	NP1Y64U09P1	Transistor source, 12 to 24V DC, 64 points, 0.12 A/point, 3.2 A/common, optional connector		Connector	NP1Y64U09P1	○	○	○	○
	NP1Y08S	SSR, 100 to 240 V AC, 8 points: all points are independent, 2.2 A/point		Screw terminal	NP1Y08S			○	○
	NP1Y08R-04	Ry, 110 V DC, 240 V AC, 8 points, 30 V DC/264 V AC: 2.2 A/point, 4 A/common		Screw terminal	NP1Y08R-04	○	○	○	○
	NP1Y16R-08	Ry, 110 V DC, 240 V AC, 16 points, 30 V DC/264 V AC: 2.2 A/point, 8 A/common		Screw terminal	NP1Y16R-08	○	○	○	○
	NP1Y08R-00	Ry, 110 V DC, 240 V AC, 8 points, 30 V DC/264 V AC: 2.2 A/point, independent		Screw terminal	NP1Y08R-00			○	○
Digital I/O module *8	**NP1W1606T**	24 V DC, 8-point source input, 12 to 24 V DC, 8-point Tr sink output		Screw terminal	NP1W1606T	○	○	○	○
	NP1W1606U	24 V DC, 8-point sink input, 12 to 24 V DC, 8-point Tr source output		Screw terminal	NP1W1606U	○	○	○	○
	NP1W3206T	24 V DC, 16-point source input, 12 to 24 V DC Tr sink 16-point output, optional connector		Connector	NP1W3206T	○	○	○	○
	NP1W3206U	24 V DC 16-point sink input, 12 to 24 V DC Tr source 16-point output, optional connector		Connector	NP1W3206U	○	○	○	○
	NP1W6406T	24 V DC, 32-point source input, 12 to 24 V DC Tr sink 32-point output, optional connector		Connector	NP1W6406T	○	○	○	○
	NP1W6406U	24 V DC, 32-point bidirectional input, 12 to 24 V DC Tr source 32-point output, optional connector		Connector	NP1W6406U	○	○		
Analog input module	**NP1AX04-MR**	Standard type multi-range input 4 ch, resolution: 10 bits		Screw terminal	NP1AX04-MR	○	○	○	○
	NP1AXH4-MR	High-speed multi-range input 4 ch, resolution: 14 bits		Screw terminal	NP1AXH4-MR	○	○	○	○
	NP1AX08V-MR	Standard type multi-range input 8 ch, resolution: 10 bits (voltage type)		Screw terminal	NP1AX08V-MR	○	○	○	○
	NP1AX08I-MR	Standard type multi-range input 8 ch, resolution: 10 bits (current type)		Screw terminal	NP1AX08I-MR	○	○	○	○
	NP1AXH8V-MR	High-speed multi-range input 8 ch, resolution: 14 bits (voltage type)		Screw terminal	NP1AXH8V-MR	○	○	○	○
	NP1AXH8I-MR	High-speed multi-range input 8 ch, resolution: 14 bits (current type)		Screw terminal	NP1AXH8I-MR	○	○	○	○
	NP1AXH8VG-MR	High-speed multi-range input 8 ch, between channels insulated, resolution: 16 bits (voltage type)		Screw terminal	NP1AXH8VG-MR	○	○	○	○
	NP1AXH8IG-MR	High-speed multi-range input 8 ch, between channels insulated, resolution: 16 bits (current type)		Screw terminal	NP1AXH8IG-MR	○	○	○	○
	NP1AXH4-PT	Resistance thermometer element input (Pt1 00 Ω/JPt 100 Ω) 4 ch Accuracy: ±0.3% (ambient temperature: 18 to 28°C), ±0.7% (ambient temperature: 0 to 55°C)		Screw terminal	NP1AXH4-PT	○	○	○	○
	NP1AXH6G-PT	High-accuracy resistance thermometer element input (Pt100Ω/JPt100Ω) 6 ch Accuracy: ±0.05 to ±0.07% (ambient temperature: 18 to 28°C), ±0.239% (ambient temperature: 0 to 55°C)		Screw terminal	NP1AXH6G-PT	○	○	○	○
	NP1AXH4-TC	Thermo-couple input module 4 ch Accuracy: ±0.3% (ambient temperature: 18 to 28°C), ±0.7% (ambient temperature: 0 to 55°C)		Screw terminal	NP1AXH4-TC	○	○	○	○
	NP1AXH8G-TC	High-accuracy thermo-couple input module 8 ch Accuracy: ±0.05 to ±0.26% (ambient temperature: 18 to 28°C), ±0.3 to ±0.6% (ambient temperature: 0 to 55°C)		Screw terminal	NP1AXH8G-TC	○	○	○	○
	NP1AXH4DG-MR	Distributor module, 4 ch, between channels high dielectric strength insulated, resolution: 16 bits Accuracy: ±0.1% of F.S.R. (ambient temperature: 25°C)		Screw terminal	NP1AXH4DG-MR	○	○*7		
Analog output module	**NP1AY02-MR**	Standard type multi-range output 2 ch, resolution: 10 bits		Screw terminal	NP1AY02-MR	○	○	○	○
	NP1AYH2-MR	High-speed multi-range output 2 ch, resolution: 14 bits		Screw terminal	NP1AYH2-MR	○	○	○	○
	NP1AYH4V-MR	High-speed multi-range output 4 ch, resolution: 14 bits (voltage type)		Screw terminal	NP1AYH4V-MR	○	○	○	○
	NP1AYH4I-MR	High-speed multi-range output 4 ch, resolution: 14 bits (current type)		Screw terminal	NP1AYH4I-MR	○	○	○	○

*8 Connectors (solder type) for digital input, output, I/O mixture and positioning module are separately sold.
Applicable connector type: Fujitsu FCN-361J040-AU (connector), FCN-360C040-B (cover), our product type: **NP8V-CN**

○	Applicable	-	Not applicable

Ordering Information

Product name	Model	Specifications and names	Ordering code	Standards CE *2	UL cUL	LR *3	NK
Analog output module	NP1AYH4VG-MR	High-speed multi-range output 4 ch, between channels insulated, resolution: 14 bits (voltage type) Screw terminal	NP1AYH4VG-MR	○	○	○	○
	NP1AYH4IG-MR	High-speed multi-range output 4 ch, between channels insulated, resolution: 14 bits (current type) Screw terminal	NP1AYH4IG-MR	○	○	○	○
	NP1AYH8V-MR	High-speed multi-range output 8 ch, resolution: 14 bits (voltage type) Screw terminal	NP1AYH8V-MR	○	○	○	○
	NP1AYH8I-MR	High-speed multi-range output 8 ch, resolution: 14 bits (current type) Screw terminal	NP1AYH8I-MR	○	○	○	○
	NP1AYH8VHR-MR	Duplex type multi-range output 8 ch, resolution: 14 bits (voltage type) Screw terminal	NP1AYH8VHR-MR	○	○*7		
Analog I/O module	NP1AWH6-MR	High-speed multi-range I/O, input 4 ch, output 2 ch, resolution: 14 bits Screw terminal	NP1AWH6-MR	○	○		
Communication module	NP1L-WE1	Web module 10BASE-T/100BASE-TX Web server function (Japanese version) *9	NP1L-WE1	○	○		
	NP1L-WS1	Web memory module 10BASE-T/100BASE-TX Web server function/memory data collection function	NP1L-WS1				
	NP1L-ET1	Ethernet interface module 10 BASE-T/100 BASE-TX	NP1L-ET1	○	○		
	NP1L-FL3	FL-net (OPCN-2) module Ver. 3 (10/100 Mbps)	NP1L-FL3	○	○		
	NP1L-LW1	Lon Works interface module (78 kbps) Accessories: Connector for cable connected	NP1L-LW1		○		
	NP1L-PL1	P-link module Accessories: P/PE-link connector	NP1L-PL1		○		
	NP1L-PE1	PE-link module Accessories: P/PE-link connector	NP1L-PE1		○		
	NP1L-LE1	LE-net module	NP1L-LE1	○	○	○	○
	NP1L-LL2	LE-net loop2 module	NP1L-LL2	○	○	○	○
	NP1L-RS1	General purpose communication module RS-232C (connector), RS-485 (connector) each 1 ch *11	NP1L-RS1	○	○	○	○
	NP1L-RS2	General purpose communication module RS-232C (connector) 1 ch *11	NP1L-RS2	○	○	○	○
	NP1L-RS3	General purpose communication module RS-232C (connector) 2 ch *11	NP1L-RS3	○	○		
	NP1L-RS4	General purpose communication module RS-485 (connector) 1 ch *11	NP1L-RS4	○	○	○	○
	NP1L-RS5	General purpose communication module RS-485 (screw terminal) 2 ch	NP1L-RS5	○	○	○	○
	NP1L-JP1	OPCN-1 master module Accessories: OPCN-1 connector, terminating resistors (2 pieces)	NP1L-JP1	○	○	○	○
	NP1L-JS1	OPCN-1 slave module Accessories: OPCN-1 connector	NP1L-JS1	○	○		
	NP1L-RJ1	OPCN-1 interface module Accessories: OPCN-1 connector, SX bus terminating plug (2 pieces)	NP1L-RJ1	○	○	○	○
	NP1L-DN1	DeviceNet master module Accessories: Screw connector (for cable attachment)	NP1L-DN1	○	○		
	NP1L-DS1	DeviceNet slave module 1 ch Accessories: Screw connector (for cable attachment)	NP1L-DS1	○	○		
	NP1L-PD2	DeviceNet interface module Accessories: Screw connector (for cable attachment), SX bus terminating plug (2 pieces)	NP1L-RD1	○	○		
	NP1L-TL1	T-link master module Accessories: T-link connector, T-link terminating resistor (2 pieces)	NP1L-TL1	○	○	○	○
	NP1L-RT1	T-link interface module Accessories: T-link connector, SX bus terminating plug (2 pieces)	NP1L-RT1	○	○	○	○
	NP1L-TS1	T-link slave module Accessories: T-link connector	NP1L-TS1	○	○	○	○
	NP1L-PD1	PROFIBUS-DP master module Communication standard (IEC 66158, EN 50171, DIN 19245)	NP1L-PD1	○	○		
	NP1L-PS1	PROFIBUS-DP slave module Communication standard (IEC 66158, EN 50171, DIN 19245)	NP1L-PS1	○	○		
	NP1L-RP1	PROFIBUS-DP interface module Communication standard (IEC 66158, EN 50171, DIN 19245)	NP1L-RP1	○	○*7		
	NP1L-MN1	M-NET communication module M-NET x 1 channel	NP1L-MN1				
	NP1L-RM1	Remote terminal master/slave module Function as a master/slave station of remote terminal RM20/RM21 series	NP1L-RM1				
	NP1L-UC1	USB communication between the CPU module and the programming support tool	NP1L-UC1	○	○		
	NP1L-OL1	SX bus electrical-optical converter (PCF cable) Accessories: SX bus terminating plug	NP1L-OL1	○	○		
	NP1L-OL3	SX bus electrical-optical converter (Quartz cable) Accessories: SX bus terminating plug	NP1L-OL3	○			
	NP2L-OE1	SX bus electrical-optical converter Accessories: SX bus terminating plug	NP2L-OE1	○	○		
	NP2L-RP1	SX bus electrical-electrical repeater Accessories: SX bus terminating plug	NP2L-RP1	○	○*7		
	NP2L-BH1	SX bus duplex connection unit	NP2L-BH1		○	○	○
	FNC160A-C20	T-link optical converter Accessories: T-link connector, T-link terminating resistor	NH5F-OCHTL17				
	FNC360A-C20	P/PE-link optical converter Accessories: P/PE-link connector, P/PE-link terminating resistor, ferrite core	NH5F-OCHPE17				
Positioning module*8	NP1F-HC2	High-speed counter module 500 kHz x 2 ch Input signal voltage: 5 V DC Accessories: Optional connector	NP1F-HC2	○	○		
	NP1F-HC2MR	High-speed counter module 200 kHz x 2 ch, Input signal voltage: 5/12/24 V DC Accessories: Optional connector	NP1F-HC2MR	○	○		
	NP1F-HC2MR1	High-speed counter module 50 kHz x 2 ch, Input signal voltage: 5/12/24 V DC Accessories: Optional connector	NP1F-HC2MR1	○	○		
	NP1F-HC8	High-speed counter module 50 kHz x 8 ch Input signal voltage: 5 V DC Accessories: Optional connector	NP1F-HC8	○	○		
	NP1F-HP2	Two-axis pulse train output positioning module Pulse train instruction 250 kHz x 2 ch Optional connector	NP1F-HP2	○	○		
	NP1F-MP2	Two-axis pulse train multiple positioning module (open collector output): 250 kHz x 2 ch, feedback pulse: 500 kHz Accessories: Optional connector	NP1F-MP2	○	○		
	NP1F-HD2	Two-axis high-speed pulse train positioning control module: (differential output), output pulse: 5MHz, feedback pulse: 5MHz, connector (separately sold)	NP1F-HD2	○			
	NP1F-HD2A	Two-axis high-speed pulse train positioning module (differential output), output pulse: 5MHz, feedback pulse: 5MHz, connector (separately sold)	NP1F-HD2A	○			
	NP1F-HD4	4-axis high-speed pulse train positioning module (differential output), output pulse: 5MHz, feedback pulse: 5MHz, connector (separately sold)	NP1F-HD4	○			
	NP1F-MA2	Two-axis analog multiple positioning module Feedback pulse: 500 kHz x 2 ch Accessories: Optional connector	NP1F-MA2	○	○		
Function module	NP1F-DMY	Dummy module	NP1F-DMY	○	○	○	○
	NP1F-MU1	Multi-use communication module RS-232C x 1 ch, RS-485 x 1 ch Communication by the arbitrary protocol	NP1F-MU1	○	○		
	NP1F-PI4	Flow meter F/AD conversion module 10 kHz x 4 ch, between channels insulated	NP1F-PI4	○	○*7		
Personal computer loader *10	NP4H-SEDBV3	Programming Support Tool Expert (D300win) software package Version 3 (Japanese/English versions)	NP4H-SEDBV3	-	-	-	-
	NP4H-SWN	Programming Support Tool Standard (Japanese/English versions)	NP4H-SWN	-	-	-	-
Loader connecting cable	NW0H-CA3	Programming support tool connection cable for personal computer (used with the converter: NP4H-CVU)	NW0H-CA3	-	-	-	-
	NP4H-CC2	FUJILOG µK connection cable	NP4H-CC2	-	-	-	-
	NP4H-CVU	PC USB/RS-422 signal converter (in combination with loader connection cable: NW0H-CA3)	NP4H-CVU	○	○	-	-

○	Applicable	-	Not applicable

*2 The compliance with the CE marking is confirmed for a single unit in the SX series. Be sure to check the compliance with the standard of the final product in which the SX series is built.
*3 To prevent vibration, the module must be fixed for each of the base boards.
*7 There is no cUL certification.
*8 Connectors (solder type) for digital input, output, I/O mixture and positioning module are separately sold.
Applicable connector type: Fujitsu FCN-361J040-AU (connector), FCN-360C040-B (cover), our product type: **NP8V-CN**
*9 Ask our sales representative for the English version and the Chinese version.
*10 The OS and the Japanese conversion software are not included.
*11 Connector fixing screws can be mounted using metric screws (M2.6). Products using imperial screws are also available. Please contact our sales office for details. (type ends with Z607)

Product name			Model	Specifications and names		Ordering code	Standards CE *2	UL cUL	LR *3	NK
ROM cassette			**NP8PMF-16**	User ROM cassette for the SPH200, Capacity: 16 MB		NP8PMF-16	-	-	-	-
			NP8PCF-256	User ROM card compact flash memory for the SPH300/SPH2000, Capacity: 256 MB		NP8PCF-256	-	-	-	-
			NP8PSD-002	User ROM card SD memory card for the SPH3000/SPH3000 MM, Capacity: 2 GB		NP8PSD-002	-	-	-	-
Auxiliaries			**NP8P-BT**	Data backup battery (Battery type: Lithium primary battery)		NP8P-BT	-	-	-	-
			NP8P-BT1	Data backup for high-capacity battery (Battery type: Lithium primary battery)		NP8P-BT1	-	-	-	-
			NP8P-BTS	Data backup for high-capacity battery box (NP8P-BT1 + storage box)		NP8P-BTS	-	-	-	-
			NP8B-BP	SX bus terminating plug (1 piece)		NP8B-BP	-	-	-	-
			NP8B-ST	Base board mounting stud (DIN rail type (2 pieces))		NP8B-ST	-	-	-	-
			NP8V-CN	I/O, positioning control module connector (solder type)		NP8V-CN	-	-	-	-
			FTC120T	T link/ OPCN-1 connector		NH5V-TL1CC	-	-	-	-
			FTC120P	P/PE link connector		NH5V-PL1CC	-	-	-	-
			FRT120A100	T link / OPCN-1 terminating resistor		NH5V-TL1RT	-	-	-	-
			FRT220A75	P/PE link terminating resistor		NH5V-PL1RT	-	-	-	-
I/O terminal	NR1 type	OPCN-1	**NR1JX-1606DT**	24 V DC, 16-point bi-directional input, detachable terminal block		NR1JX-1606DT	○	○		
			NR1JY-08R07DT	Ry output 240 V AC / 110 V DC, 8 points, detachable terminal block		NR1JY-08R07DT	○	○		
			NR1JY-16T05DT	24 V DC, 16-point Tr sink output, detachable terminal block		NR1JY-16T05DT	○	○		
			NR1JW-16T65DT	24 V DC, 8-point source input 24 V DC, 8-point Tr sink output, detachable terminal block		NR1JW-16T65DT	○	○		
		T-LINK	**NR1TX-1606DT**	24 V DC, 16-point bi-directional input, detachable terminal block		NR1TX-1606DT	○	○	○	○
			NR1TY-08R07DT	Ry output 240 V AC / 110 V DC, 8 points, detachable terminal block		NR1TY-08R07DT	○	○	○	○
			NR1TY-16T05DT	24 V DC, 16-point Tr sink output, detachable terminal block		NR1TY-16T05DT	○	○	○	○
			NR1TW-16T65DT	24 V DC, 8-point source input 24 V DC, 8-point Tr sink output, detachable terminal block		NR1TW-16T65DT	○	○	○	○
		SX bus	**NR1SX-1606DT**	24 V DC, 16-point bi-directional input, detachable terminal block		NR1SX-1606DT	○	○		
			NR1SY-08R07DT	Ry output 240 V AC / 110 V DC, 8 points, detachable terminal block		NR1SY-08R07DT	○	○		
			NR1SY-16T05DT	24 V DC, 16-point Tr sink output, detachable terminal block		NR1SY-16T05DT	○	○		
			NR1SW-16T65DT	24 V DC, 8-point source input 24 V DC, 8-point Tr sink output, detachable terminal block		NR1SW-16T65DT	○	○		
			NR1SF-HP4DT	Pulse train output, pulse train command: 250 kHz 4 axes (2 points/1-axis)		NR1SF-HP4DT	○			
		LONWORKS	**NR1LX-1606DT**	24 V DC, 16-point (including the 4 pulse input points), detachable terminal block	Accessories: Neuron ID seal	NR1LX-1606DT				
			NR1LY-08R07DT	Ry output 240 V AC / 110 V DC, 8 points, detachable terminal block		NR1LY-08R07DT				
			NR1LW-11R80DT	Source input 24 V DC, 9 points (including the 4 pulse input points) Ry output 240 V AC / 110 V DC, 2 points, detachable terminal block		NR1LW-11R80DT				
		Option	**NR1XV-CB1**	Common extension bar (9 pins)		NR1XV-CB1	-			
CPU board			**NP3PS-SX1PCS32**	PCI-Bus-based SPH300 CPU Board Program memory capacity: 32 K steps	Accessories: Driver CD, memory backup battery	NP3PS-SX1PCS32	○			
			NP3PS-SX1PCS74	PCI-Bus-based SPH300 CPU Board Program memory capacity: 74K steps	SX bus terminating plug (2 pieces) CPU mode switching key, usage nameplate seal	NP3PS-SX1PCS74	○			
Interface board			**NP3L-LL2PCS**	PCI-bus-based LE-net loop 2 board	Accessories: Driver (CD version)	NP3L-LL2PCS			○	○
			NP3L-FL3PCS	PCI-bus-based FL-net (OPCN-2) Ver. 2.0 board (10/100 Mbps)	Accessories: Driver (CD version), name and use seal	NP3L-FL3PCS				
Power Supply Unit for FLT-ASFKA			**NP8S-LC1**	100 to 200 V AC input, board-mounting type, supply of power to FLT-ASFKA through a loader cable		NP8S-LC1				
			NP8S-LC2	100 to 200 V AC input, tabletop-mounting type, supply of power to FLT-ASFKA through a loader cable		NP8S-LC2				

○ Applicable - Not applicable

Ordering Information

Product name			Model	Specifications and names	Ordering code	Standards CE *2	UL cUL	LR *3	NK
Renewal tool	F120S-F150S F250 F120H F80H	Frame set (SPH mounting board + base unit)	**NP8REFSS-02**	NP8REFSB-02 x 1 unit, NP8REFSF-02 x 1 unit	NP8REFSS-02				
			NP8REFSS-04	NP8REFSB-04 x 1 unit, NP8REFSF-04 x 1 unit	NP8REFSS-04				
			NP8REFSS-06	NP8REFSB-06 x 1 unit, NP8REFSF-06 x 1 unit	NP8REFSS-06				
			NP8REFSS-08	NP8REFSB-08 x 1 unit, NP8REFSF-08 x 1 unit	NP8REFSS-08				
		SPH mounting board	**NP8REFSF-02**	Base unit for NP8REFSF-02 (spacer, screw, washer, and nut included, four pieces each)	NP8REFSF-02				
			NP8REFSF-04	Base unit for NP8REFSF-04 (spacer, screw, washer, and nut included, four pieces each)	NP8REFSF-04				
			NP8REFSF-06	Base unit for NP8REFSF-06 (spacer, screw, washer, and nut included, four pieces each)	NP8REFSF-06				
			NP8REFSF-08	Base unit for NP8REFSF-08 (spacer, screw, washer, and nut included, four pieces each)	NP8REFSF-08				
		Base unit	**NP8REFSB-02**	Attachable base: For FSB084H	NP8REFSB-02				
			NP8REFSB-04	Attachable base: For FSB124H, FSB086H	NP8REFSB-04				
			NP8REFSB-06	Attachable base: For FSB126H, FSB088H	NP8REFSB-06				
			NP8REFSB-08	Attachable base: For FSB128H, FSB156S-2, FSB154S-4, FSB110H	NP8REFSB-08				
		Conversion adapter (Unit for mounting conversion adapter)	**NP8REFSA-204**	20-pole terminal block, for DC signals	NP8REFSA-204				
			NP8REFSA-202	20-pole terminal block, for AC signals	NP8REFSA-202				
			NP8REFSA-384	38-pole terminal block, for DC signals	NP8REFSA-384				
			NP8REFSA-382	38-pole terminal block, for AC signals	NP8REFSA-382				
		Conversion cable (Cable length: 600 mm)	**NP8REFSC-164X1**	16 points, for DC input (SPH side: Terminal block)	NP8REFSC-164X1				
			NP8REFSC-164Y1	16 points, for DC output (SPH side: Terminal block)	NP8REFSC-164Y1				
			NP8REFSC-164Y2	16 points, for DC output (SPH side: Terminal block)	NP8REFSC-164Y2				
			NP8REFSC-162W1	For both input and output, for analog signals (SPH side: Terminal block)	NP8REFSC-162W1				
			NP8REFSC-324X1	For DC input (SPH side: Terminal block)	NP8REFSC-324X1				
			NP8REFSC-324X2	For DC input (SPH side: Connector)	NP8REFSC-324X2				
			NP8REFSC-324Y1	32 points, for DC output (SPH side: Connector)	NP8REFSC-324Y1				
			NP8REFSC-324W2	32 points, for DC output (SPH side: Connector)	NP8REFSC-324W2				
			NP8REFSC-164W1	16 points, for relay independent-output (SPH side: Terminal block)	NP8REFSC-164W1				
			NP8REFSC-324W1	32 points, for both input and output (SPH side: Connector) (Cable length: 200 mm)	NP8REFSC-324W1				
			NP8REFSC-322X1	32 points, for AC input (SPH side: Terminal block)	NP8REFSC-322X1				
			NP8REFSC-322Y1	32 points, for AC output (SPH side: Terminal block)	NP8REFSC-322Y1				
	F70	Base adapter	**NP8RE70B-02**	For NC1B02 (Mounting screws included)	NP8RE70B-02				
			NP8RE70B-04	For NC1B04, NC1B02 (Mounting screws included)	NP8RE70B-04				
			NP8RE70B-06	For NC1B06, NC1B04, NC1B02 (Mounting screws included)	NP8RE70B-06				
			NP8RE70B-08	For NC1B8, NC1B06, NC1B04 (Mounting screws included)	NP8RE70B-08				
			NP8RE70B-10	For NC1B10, NC1B08, NC1B06 (Mounting screws included)	NP8RE70B-10				
		Conversion adapter	**NP8RE70A-201**	16 points, for DC input/output (Terminal cover included)	NP8RE70A-201				
			NP8RE70A-202	16 points, for AC input/output (Terminal cover included)	NP8RE70A-202				
			NP8RE70A-203	8 points, for relay independent-output (Terminal cover included)	NP8RE70A-203				
			NP8RE70A-204	2 points/ 4 points, for analog input (Terminal cover included)	NP8RE70A-204				
			NP8RE70A-205	2 points, for analog output (Terminal cover included)	NP8RE70A-205				
			NP8RE70A-401	32 points, for DC input/output	NP8RE70A-401				
			NP8RE70A-402	64 points, for DC input/output	NP8RE70A-402				
	F55	Base adapter	**NP8RE55B-04**	For NV1P-042, NV1P-044, NV1E-042, NV1E-044 (Mounting screws included)	NP8RE55B-04				
			NP8RE55B-06	For NV1P-062, NV1P-064, NV1E-062, NV1E-064 (Mounting screws included)	NP8RE55B-06				
			NP8RE55B-08	For NV1P-082, NV1P-084, NV1E-082, NV1E-084 (Mounting screws included)	NP8RE55B-08				
			NP8RE55B-08L	For NV1P-082, NV1P-084, NV1E-082, NV1E-084 (Mounting screws included)	NP8RE55B-08L				
		Conversion adapter	**NP8RE55A-181**	16 points, for DC input and relay output (8 points x 2 common)	NP8RE55A-181				
			NP8RE55A-182	16 points, for DC output	NP8RE55A-182				
			NP8RE55A-183	8 points, for relay independent-output	NP8RE55A-183				
			NP8RE55A-184	8 points, for AC input	NP8RE55A-184				
			NP8RE55A-185	8 points, for SSR output	NP8RE55A-185				
			NP8RE55A-186	4 points, for analog input	NP8RE55A-186				
			NP8RE55A-187	2 points, for analog voltage output	NP8RE55A-187				
			NP8RE55A-188	2 points, for analog current output	NP8RE55A-188				
			NP8RE70A-401	32 points, for DC input/output	NP8RE70A-401				
			NP8RE55A-402	32 points, for DC input/output	NP8RE55A-402				
	NJ	Base adapter	**NP8RENJB-03**	For NJ-BP3-Z400 (NJ-BP3), NJ-BE3-Z400(NJ-BE3) (Mounting screws included)	NP8RENJB-03				
			NP8RENJB-05	For NJ-BP5-Z400 (NJ-BP5), NJ-BT5-Z400 (NJ-BT5), NJ-BE5-Z400 (NJ-BE5) (Mounting screws included)	NP8RENJB-05				
			NP8RENJB-08	For NJ-BP8-Z400 (NJ-BP8), NJ-BT8-Z400 (NJ-BT8), NJ-BE8-Z400 (NJ-BE8) (Mounting screws included)	NP8RENJB-08				
			NP8RENJB-08L	For NJ-BP8-Z400 (NJ-BP8), NJ-BT8-Z400 (NJ-BT8), NJ-BE8-Z400 (NJ-BE8) (Mounting screws included)	NP8RENJB-08L				
		Conversion adapter	**NP8RENJA-181**	16 points, for DC input and relay output (Mounting brackets, one conversion PC board, terminal labels, junction connectors included)	NP8RENJA-181				
			NP8RENJA-182	16 points, for DC output (Mounting brackets, one conversion PC board, terminal labels, junction connectors included)	NP8RENJA-182				
			NP8RENJA-183	8 points, for relay output (Mounting brackets, one conversion PC board, terminal labels, junction connectors included)	NP8RENJA-183				
			NP8RENJA-184	For multi-range analog input (Mounting brackets, one conversion PC board, terminal labels, junction connectors included)	NP8RENJA-184				
			NP8RENJA-185	For multi-range analog output (Mounting brackets, one conversion PC board, terminal labels, junction connectors included)	NP8RENJA-185				

○ Applicable - Not applicable

Product name		Model	Specifications and names	Ordering code	Standards			
					CE *2	UL cUL	LR *3	NK
Renewal tool	MICREX-F Size I/O Module	**NP8X-120ZC**	FTU120C (32DI) -equivalent I/O module The bit order of the terminal block is switched by the switch	NP8X-120ZC				
		NP8X-123ZC	FTU123C (24 V DC input, 32DI) -equivalent I/O module The bit order of the terminal block is switched by the switch. Depth: Standard model	NP8X-123ZC				
		NP8X-155ZC	FTU155C (32DI, 100 V AC) -equivalent I/O module The bit order of the terminal block is switched by the switch. Depth: Standard model	NP8X-155ZC				
		NP8X-165ZC	FTU165C (32DI, 200 V AC) -equivalent I/O module The bit order of the terminal block is switched by the switch. Depth: Standard model	NP8X-165ZC				
		NP8SX-113ZC	FTU113B (24 V DC input, 16DI) -equivalent I/O module The bit order of the terminal block is switched by the switch. Depth: Low-profile model	NP8SX-113ZC				
		NP8SX-143ZC	FTU143B (8DI, 100 V DC) -equivalent I/O module The bit order of the terminal block is switched by the switch. Depth: Low-profile model	NP8SX-143ZC				
		NP8Y-221ZC	FTU221C (24 V DC output, 32DO) -equivalent I/O module The bit order of the terminal block is switched by the switch. Depth: Standard model	NP8Y-221ZC				
		NP8Y-223ZC	FTU223B (48 V DC output, 32DO) -equivalent I/O module The bit order of the terminal block is switched by the switch. Depth: Standard model	NP8Y-223ZC				
		NP8Y-226ZC	FTU226B (32DO source) -equivalent I/O module The bit order of the terminal block is switched by the switch. Depth: Standard model	NP8Y-226ZC				
		NP8Y-250ZC	FTU250B (16SSR) -equivalent I/O module The bit order of the terminal block is switched by the switch	NP8Y-250ZC				
		NP8Y-257ZC	FTU257B (SSR32 points) -equivalent I/O module The bit order of the terminal block is switched by the switch. Depth: Standard model	NP8Y-257ZC				
		NP8Y-266ZC	FTU266B (32Ry) -equivalent I/O module The bit order of the terminal block is switched by the switch	NP8Y-266ZC				
		NP8Y-263ZC	FTU263B (16DO, all-point relay-independent contacts) -equivalent I/O module The bit order of the terminal block is switched by the switch. Depth: Standard model	NP8Y-263ZC				
		NP8SY-260ZC	FTU260B (16 points Ry, 8 points common) -equivalent I/O module The bit order of the terminal block is switched by the switch. Depth: Low-profile model	NP8SY-260ZC				
		NP8SY-263ZC	FTU263B (16Ry, all-point independent contacts) -equivalent I/O module The bit order of the terminal block is switched by the switch. Depth: Low-profile model	NP8SY-263ZC				
		NP8AX-340MR	FTU340A/341A/342A/343A (voltage, 8AI) -equivalent I/O module Depth: Standard model	NP8AX-340MR				
		NP8AX-344	FTU344A (current, 8AI) -equivalent I/O module Depth: Standard model	NP8AX-344				
		NP8AY-440MR	FTU440A/441A/442A/443A (voltage, 8AO) -equivalent I/O module Depth: Standard model	NP8AX-440MR				
		NP8B-06	For 6-slot base of MICREX-SX	NP8B-06				
		NP8B-08	For 8-slot base of MICREX-SX	NP8B-08				
		NP8B-11	For 11-slot base of MICREX-SX	NP8B-11				
		NP8B-13	For 13-slot base of MICREX-SX	NP8B-13				

○ Applicable - Not applicable

Product warranty

Dear Customer

Implied consent when you place an order

When you place an order for a product described in this document, in addition to the quotation, agreement, brochure, operation manual, user's manual and other documentation, please be aware that use of the product is based on your consent to the following items, especially those related to the warranty and application.

1. Warranty Period and warranty coverage

1-1 Warranty period

(1) The warranty period is for one year from the date of purchase, or for 18 months from the date of manufacture printed on the nameplate, whichever is earlier.
(2) Note that the warranty for parts which Fuji Electric's service department repaired is effective for six months from the date of the repair.

1-2 Warranty coverage

(1) If Fuji Electric is responsible for a malfunction occurring during the warranty period, we will replace or repair the failed part and deliver it free of charge to the location where it was installed or purchased. However, the warranty will not cover the following cases:
  1) The malfunction occurs due to usage that impacts the product lifetime under inappropriate conditions, environment, handling, or excessive usage not described in the brochure, instruction manual, and user's manual.
  2) The malfunction is due to a cause not related to the purchased or delivered product.
  3) The malfunction is due to a cause not related to Fuji Electric's products, such as the customer's equipment and software design.
  4) As for our programmable products, the malfunction is caused by programs programmed by a company or person other than Fuji Electric.
  5) The malfunction is caused by any modification or repair made by a company or person other than Fuji Electric.
  6) The malfunction is caused because the consumable parts described in the operation manual and brochure have not been maintained and replaced properly.
  7) The cause cannot be foreseen from the perspective of science and technology as relates to the practical use of the product at the time of purchase or delivery.
  8) The malfunction is caused by a factor for which Fuji Electric is not responsible, such as a natural disaster or fire resulting from earthquakes, thunder, floods, etc., and external forces beyond control including abnormal voltage.
(2) Note that the warranty is applicable only to the purchased or delivered goods alone.
(3) The warranty covers only the products described in section 1-2 (1). The warranty does not cover any damages, such as the damage, loss, or lost profit of machinery, that may be induced by the purchased or delivered goods.

1-3 Fault diagnosis

In principle, please make a primary fault diagnosis. However, Fuji Electric or our service department can perform the fault diagnosis for a fee upon the customer's request. In such a case, you are asked to bear the expenses charged in accordance with our fee schedule.

2. Application

When using products described in this document, please make sure that the use of the products does not lead to a serious accident in the event that a failure or malfunction occurs in the products, and in cases of failure or malfunction, safety measures, such as a redundant design, malfunction preventive design, fail safe design, and foolproof design, should be adopted outside of the products in the system as standard operating conditions for the products.
Also, do not use the products under conditions or environments which are not described in the operation manual or user's manual. When using the products under the following conditions, please consult Fuji Electric in advance.

Generating stations including nuclear power, radiation-relevant facilities, railways, space / airline facilities
Life line facilities such as gas, water lines, electricity, and communication, medical equipment, automobiles
Combustion / fuel systems, amusement machines, data centers, charging or settlement systems
Others (applications which have a large impact on life, the human body, community, important properties or rights)

3. Repair period and supply period (maintenance period) of spare parts after discontinuation

When a model (product) is discontinued, its repair is conducted for seven years after the discontinued date. Also, main spare parts for repairs are supplied for seven years after the discontinued date. However, since electronic parts have a short life cycle and the procurement or production of electronic parts may be assumed to be difficult, the repair and supply of spare parts may become difficult even in the warranty period. For more information, please contact your Fuji Electric sales representative or service desk.

4. Delivery conditions

For standard products which do not require application based settings or adjustments, the delivery will be completed when the products are transported to the customer. We are not responsible for field adjustment or trial operation.

5. Service costs

The price of purchased or delivered goods does not include service costs such as fees for dispatching engineers. For more information, please contact your Fuji Electric sales representative or service desk.

6. Scope of services

The description above assumes the products are sold and used in Japan. For information on products sold and used outside of Japan, please consult your product dealer or Fuji Electric.

MEMO

Guide to MICREX-SX Series Website

On the MICREX-SX series website, you can quickly access the information you want.
You can also download the latest technical information.

Fuji PLC | Search

www.fujielectric.com/products/plc /

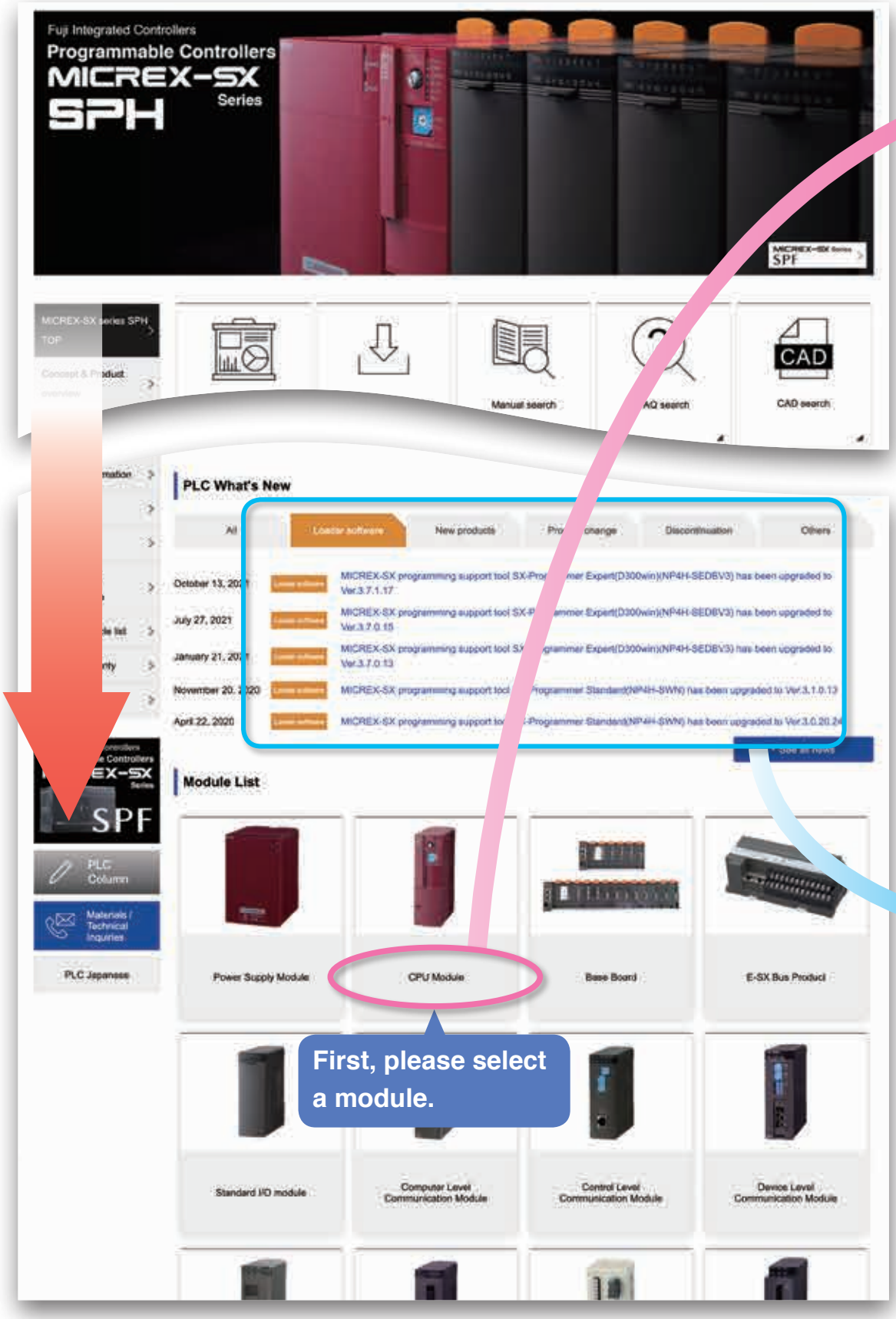

Please sign up for a free Fe Library membership.

If you are a registered member, you can access technical information free of charge, such as user's manual, guide, and CAD data.

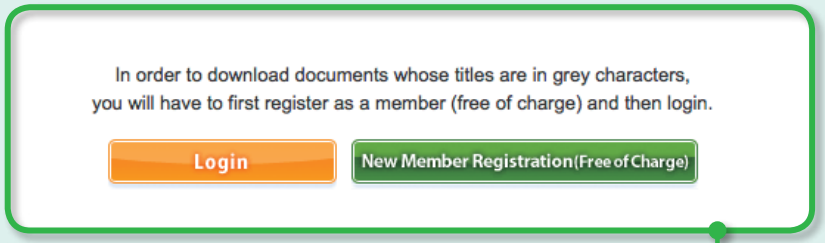

* Fe Library is a download site for the product documents provided by Fuji Electric Co., Ltd.
https://felib.fujielectric.co.jp/download/index.htm?site=global&lang=en

[CPU Module Screen]

[CPU Module User Manual Screen]

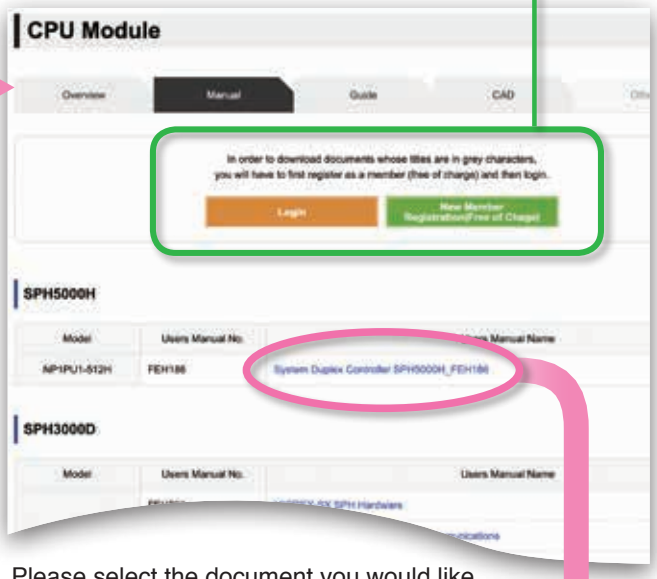

Please select the document you would like to see based on your model.

You can view the model lineup and technical document types of the selected modules.

If you login to the Fe Library, you can download data.

You can download the upgraded (latest) version of the programming support tool.

[Expert (D300win)]

Support tools related to development efficiency

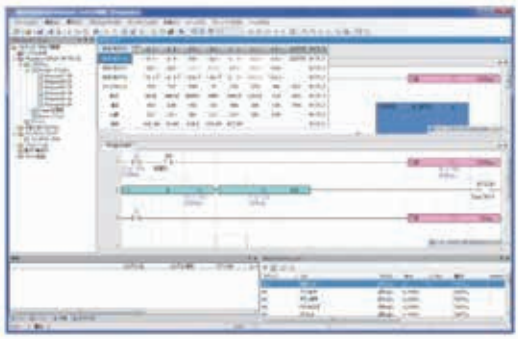

[Standard]

Support tools related to operability

MEMO

⚠ Safety Precautions

- Before using this product, read the "Instruction Manual" and "User manual" carefully or consult with the retailer you purchased this product from and use this product correctly.
- The product described in this catalog has not been designed and produced to be used for equipment or systems which could endanger human life.
- Contact your dealer if you are considering using the product described in this catalog for any applications which have a large impact on life, the human body, community, important assets or rights (e.g., for power stations, radiation-related facilities, railways, space/airline facilities, lifeline facilities, or medical equipment).
- Please make sure that the use of the products does not lead to a serious accident in the event that a failure or malfunction occurs in the products described in this catalog. And in cases of failure or malfunction, safety measures should be prepared using external devices in a systematic manner as standard operating conditions for the products.
- For safe use, this product must be connected by those with specialized skills (in electric work, wiring work, etc.).
- Use a power supply which is reinforced and isolated from an AC power supply for an external power supply to connect to DC I/O (such as 24 V DC power supply). (You are recommended to use a power supply that conforms to EN60950.) Otherwise, an accident or breakdown may result.

Before purchasing this product

- For the details, price, and installation fee of the products included in this catalog, contact the retailer or Fuji Electric Co., Ltd.
- Please note that for product improvement, the appearance and specifications may be subject to change without prior notice.
- Please note in advance that printed and actual colors may differ slightly.

● Appearance and specifications are subject to change without prior notice for the purpose of product improvement.

Fuji Electric Co., Ltd.

Gate City Ohsaki, East Tower,
11-2, Osaki 1-chome, Shinagawa-ku, Tokyo 141-0032, Japan

Phone : +81-3-5435-7057
Fax : +81-3-5435-7420
URL : www.fujielectric.com/

Printed in Japan 2022-2(B22i/D01)0.5 FOLS 22B2-E-0004i